KT&C INNOVATIVE
HIGH DEFINITION SURVEILLANCE

EZHD

Megapixel over coax and UTP

KEZ-c1TR28V12XIR

HD-TVI 720p Low Light Varifocal IP66 EXIR Turret Cameras with OSD, CVBS Test Output and UTC Control

Quick Operation Guide

Thank you for selecting this KT&C Omni EZHD Series product. For additional information please refer to the complete User Guide for this cameras series. End users should contact their KT&C Certified Dealer for service. Certified Dealers can obtain support directly from KT&C.

About This Guide

While KT&C makes every effort to insure the completeness and accuracy of the information contained in this Guide, we are not responsible for typographical errors or misprints. At the same time, KT&C reserves the right to make changes to improve the performance of our products at any time without notice, and so the specifications and content of this document are subject to change without notice. Every effort will be made to include updates in new versions of this manual and/or online.

Regulatory Information

FCC Information

FCC compliance: This equipment has been tested and found to comply with the limits for a digital device, pursuant to part 15 of the FCC Rules. These limits are designed to provide reasonable protection against harmful interference when the equipment is operated in a commercial environment. This equipment generates, uses, and can radiate radio frequency energy and, if not installed and used in accordance with the instruction manual, may cause harmful interference to radio communications. Operation of this equipment in a residential area is likely to cause harmful interference in which case the user will be required to correct the interference at his own expense.

FCC Conditions

This device complies with part 15 of the FCC Rules. Operation is subject to the following two conditions:

1. This device may not cause harmful interference.

2. This device must accept any interference received, including interference that may cause undesired operation.

EU Conformity Statement

CE

This product and - if applicable - the supplied accessories too are marked with "CE" and comply therefore with the applicable harmonized European standards listed under the Low Voltage Directive 2006/95/EC, the EMC Directive 2004/108/EC, the RoHS Directive 2011/65/EU.

2012/19/EU (WEEE directive): Products marked with this symbol cannot be disposed of as unsorted municipal waste in the European Union. For proper recycling, return this product to your local supplier upon the purchase of equivalent new equipment, or dispose of it at designated collection points. For more information see: www.recyclethis.info.

2006/66/EC (battery directive): This product contains a battery that cannot be disposed of as unsorted municipal waste in the European Union. See the product documentation for specific battery information. The battery is marked with this symbol, which may include lettering to indicate cadmium (Cd), lead (Pb), or mercury (Hg). For proper recycling, return the battery to your supplier or to a designated collection point. For more information see: www.recyclethis.info

Safety Instructions

These instructions are intended to ensure that the camera is installed in a manner that avoids danger to persons or property loss.

These precautionary measures are divided into “Warnings” and “Cautions”

Warnings: Serious injury or death may occur if any of the warnings are neglected.

Cautions: Injury or equipment/property damage may occur if any of the cautions are neglected.

Warnings Follow these safeguards to prevent serious injury or death.	**Cautions** Follow these precautions to prevent potential injury or material damage.

Warnings

- In the use of the product, you must be in strict compliance with the electrical safety regulations of the nation and region. Please refer to technical specifications for detailed information.
- Input voltage should meet the requirements for both the SELV (Safety Extra Low Voltage) and Limited Power Source for 12 VDC

according to the IEC60950-1 standard. Please refer to technical specifications for detailed information.

- If connecting several devices to one power supply, to avoid any overload that may cause over-heating or a fire hazard insure that the power supply is adequate for the power load.
- Please make sure that all plugs are firmly connected to the power sockets. When the product is mounted on wall or ceiling, the device shall be firmly attached, taking into consideration any wind, snow loading, or other factors. The mounting surface shall be capable of supporting several times the base weight of the camera.
- If smoke, unusual odors or noise come from the device, turn off the power at once and unplug the power cable, and then contact authorized service personnel.

Cautions

- Make sure the power supply voltage is correct before using the camera.
- Do not drop the camera or subject it to physical shock.
- Do not touch lenses or sensor modules with fingers. If cleaning is necessary, use clean cloth with a bit of ethanol and wipe gently. If the camera will not be used for an extended period, please protect the lens openings from damage and/or debris.
- Avoid aiming the camera at the sun or extremely bright light sources. Blooming or smearing may occur in excessive light

(which is not a malfunction), and could compromise the performance of the sensor.

- The sensor may be damaged if exposed to laser energy, so when any laser equipment is in use, make sure that the sensor will not be exposed to the laser beam.
- Do not place the camera in extremely hot or cold (see camera specifications) locations. Do not exceed the rated environmental (indoor) conditions. Do not expose the camera to high levels of electromagnetic (RF) radiation.
- To avoid heat accumulation, good ventilation is required in the operating environment.
- Keep the camera away from solvents while in use; exposure to liquids should not exceed IP66 environmental conditions.
- During shipping, the camera shall be packed in its original packing, or packing providing the equivalent protection.
- Improper use or replacement of any batteries (if so equipped) may result in the hazard of explosion. Replace with the same or equivalent type only. Dispose of used batteries according to the instructions provided by the battery manufacturer.
- If the product does not function properly, Dealers please contact KT&C; End Users please contact your KT&C Certified Dealer or an authorized service center. Do not disassemble the camera for repair or maintenance by yourself. (KT&C shall not assume any responsibility for problems caused by unauthorized repair or maintenance.)

Table of Contents

1 Appearance and Description 8

2 Installation 9

3 Camera Connection & Focus 12

4 OSD Menu Operation 14

1 Appearance and Description

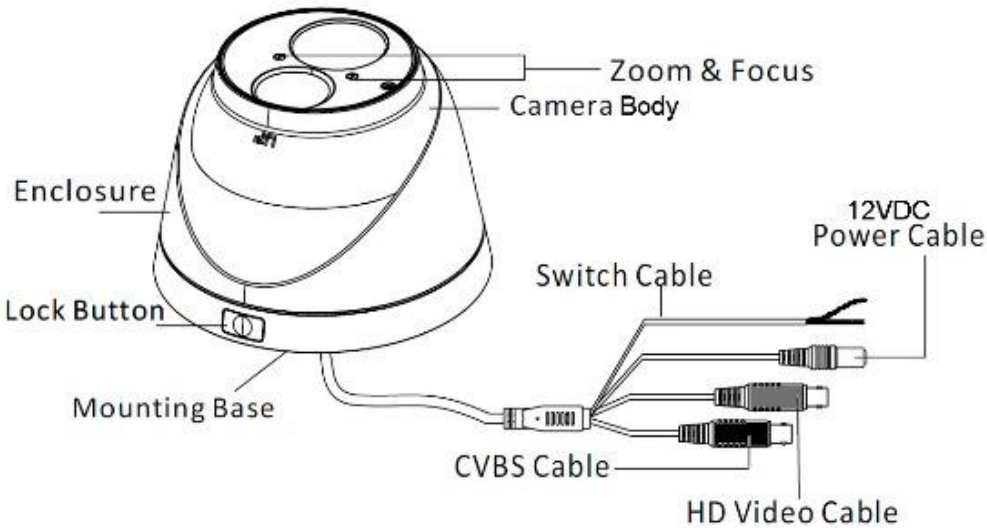

Figure 1-1 Varifocal Turret Camera Overview

Note: This camera can output HD-TVI –or- CVBS analog video, but not both at the same time. To employ a CVBS test monitor connected to the black BNC video test output, connect together the bare ends of the 'switch cable'; when ready to put the camera in service, separate and insulate the switch cable wires to restore the HD-TVI output.

2 Installation

Before you start:

- Make sure the camera is in good condition and all the accessory parts are included.
- Make sure all related equipment is powered-off during the installation.
- Check to insure that the specifications of the camera are correct for the installation environment.
- Make sure the power supply voltage is 12VDC to avoid damage to the camera. OBSERVE POLARITY!
- If the product does not function properly, Dealers please contact KT&C; End Users please contact your KT&C Certified Dealer or an authorized service center. Do not disassemble the camera for repair or maintenance by yourself.
- Make sure that the mounting surface is strong enough to withstand three times the weight of the camera.

If the IR LED in this camera will be active, you must observe the following precautions to prevent IR reflection:

- Dust or grease on the lens/dome cover will cause IR reflection. Please do not remove the cover protective film until the installation is finished. If there is dust or grease on the lens/dome cover, clean the lens/dome cover with clean soft cloth and isopropyl alcohol.

- Make sure that there is no reflective surface too close to the camera lens. The IR light from the camera may reflect back into the lens causing haze, distortion or improper scene exposure.

Steps:

1. Attach the drill template on the wall or ceiling.

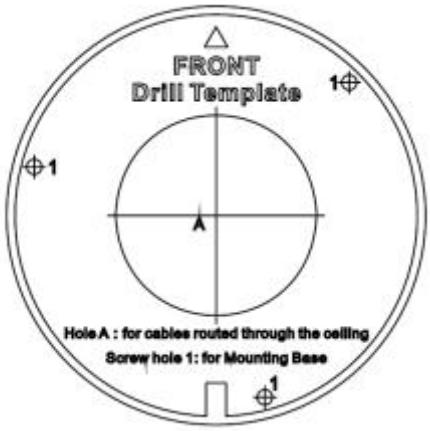

Figure 2-1 Attach the template

2. Separate the camera from the mounting base (see Figure 2-2). Secure the base to the wall or ceiling with the supplied screws and expansion anchors (if required).

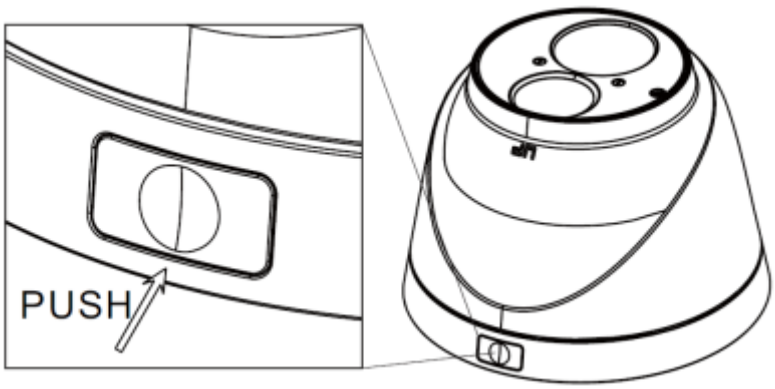

Figure 2-2 Separate the Camera from the Mounting Base

3. Connect the power and video wires. Place the camera onto the mounting base and secure with the enclosure/outer housing.

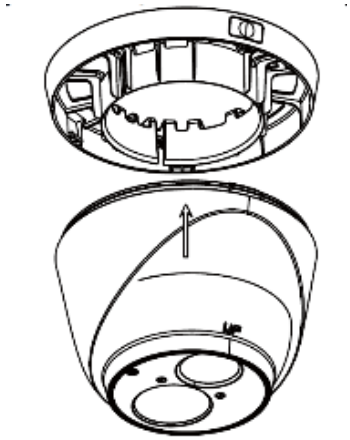

Figure 2-3 Place camera body and enclosure into base

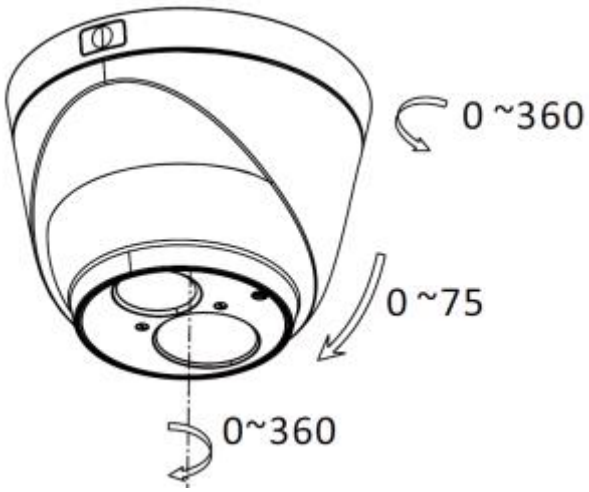

Figure 2-4 3-axis Adjustment

4. Adjust the camera direction:

1). Adjust the pan angle [P] of the camera [0~360°].

2). Adjust the tilt angle [T] of the camera [0~75°].

3). Rotate the body [R] 0~360° so that the image is upright.

3 Camera Connection & Focus

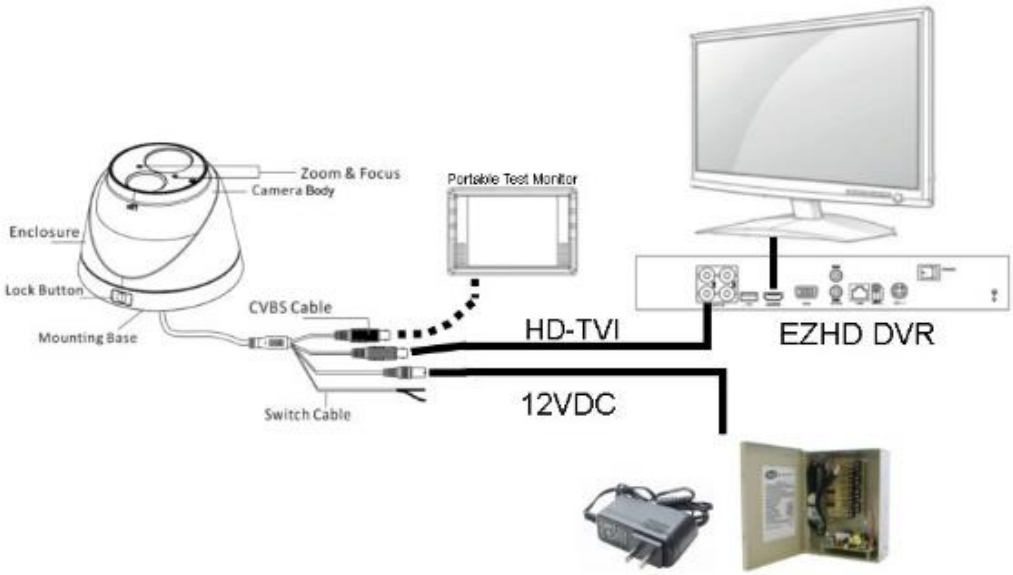

Figure 3-1 Camera Connection

NOTE

This camera can output HD-TVI - or- CVBS analog video, but not both at the same time. To employ a CVBS test monitor connected to the black BNC video test output, connect together the bare ends of the 'switch cable'; when ready to put the camera in service, separate and insulate the switch cable wires to restore the HD-TVI output.

Or, to view the camera video, connect the camera BNC output to an EZHD Series DVR and observe the video via the monitor output, or over a network connection (web browser, OMNI CMS or OMNI Remote smart phone app).

Camera Focus

The varifocal lens controls are on the face of the camera body.

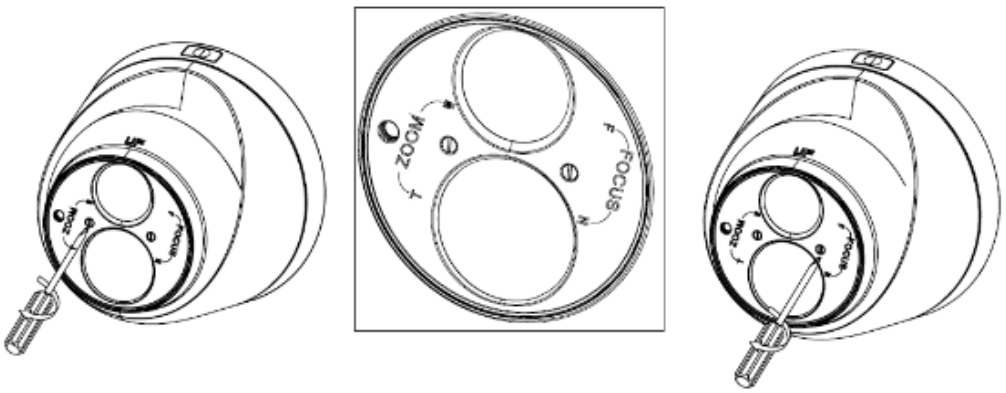

Make the adjustments to capture the desired field of view while observing the image though a test monitor or the EZHD DVR system as described above. The OMNI Focus utility can also be employed on a PC networked to the DVR to optimize the focus (see OMNI Tools / OMNI Focus documentation).

4 OSD Menu Operation

The OSD menu can ONLY be accessed via the HD-TVI connection “Up the Cable” from an EZHD recorder. UTC control will not be available when using the CVBS connection.

When a KT&C Up-the-Cable [Coaxitron] capable camera such as this one is connected, you can select the PTZ protocol to be HDCAM-C.

To access the OSD menu on KT&C Up-the-Cable compatible cameras use the “IRIS +” [iris open] function as the “MENU” or “ENTER” function. Otherwise, the OSD menus can be navigated via the up/down direction buttons, and one can scroll through selection choices by using the left/right direction buttons. The direction button roles may change in various OSD sub-menus.

Figure 4-1 PTZ Menu for UTC Control

If the HDCAM-C UTC protocol is already selected, clicking on IRIS + will bring up the OSD menu. To set/verify the protocol click on “Configuration” to bring up the detailed PTZ configuration screen.

Figure 4-2 PTZ Configuration Screen

To check/change the protocol, click on the “PTZ Settings” button to bring up that screen.

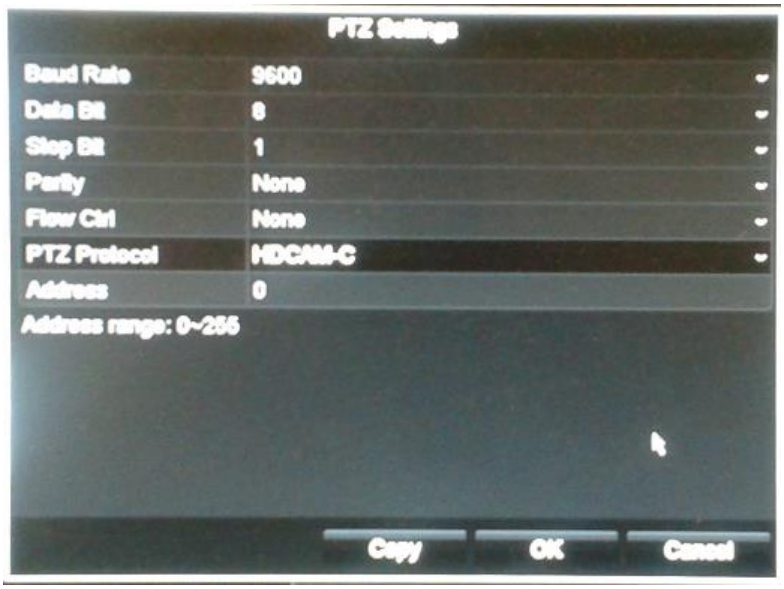

Figure 4-3 PTZ Protocol Setting for UTC Control

Choose HDCAM-C protocol from the “PTZ Protocol” drop down menu.

Once HDCAM-C has been selected, click OK, then using the PTZ controls click IRIS+ to bring up the camera OSD menu.

NOTE: While the EZHD DVRs can display the CVBS image from the camera, Up-the-Cable control is only active on the HD-TVI video cable from the camera.

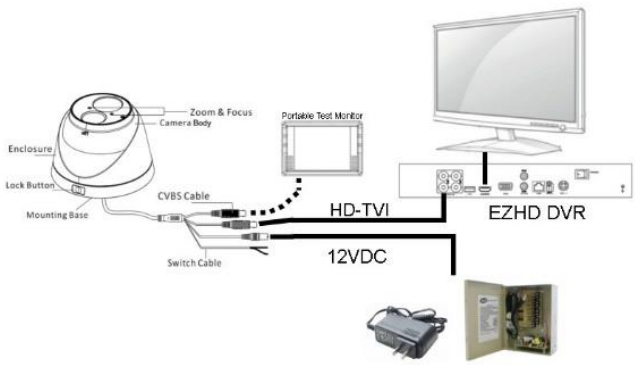

Figure 4-4 TVI and CVBS Connections

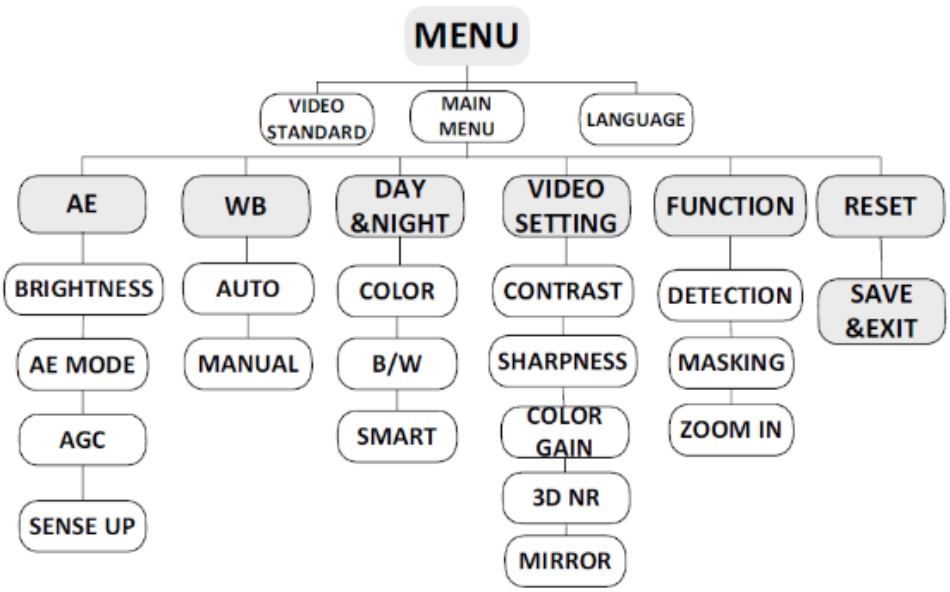

Figure 4-5 Top Level Menu

4.1 AE

Move the cursor to AE, and you can adjust the image brightness by the **BRIGHTNESS**, **AE MODE**, **AGC**, and **SENS-UP** in this menu.
As shown in Figure **4-6**.
BRIGHTNESS: Set the brightness value from 1 to 10 to darken or brighten the image.
AE MODE: Set AE mode as GLOBLE AE, and D-WDR.
AGC: **HIGH**, **MIDDLE**, and **LOW** can be set for the AGC level. Select OFF to disable the AGC.
SENSE UP: Set the SENSE UP value from 0 to 16.

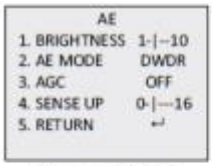

Figure **4-6** AE

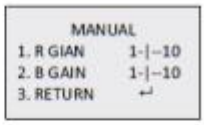

Figure **4-7** Manual WB

4.2 WB

Move the cursor to WB, and you can set White Balance mode as **AUTO** and **MANUAL** in this menu.
AUTO: white balance is being adjusted automatically.
MANUAL: Set the **R GAIN/B GAIN** value from 1 to 10. As shown in Figure **4-7**.

4.3 DAY & NIGHT

Move the cursor to DAY & NIGHT, and select **COLOR**, **B/W**, or **SMART** as the DAY & NIGHT mode.
COLOR: The image is colored in day mode all the time.
B/W: The image is black & white all the time, and the IR LED turns on in the low-light conditions.
SMART: Select to turn on/off the INFRARED_LAMP and to set the Smart IR level from 1to 16.
As shown in Figure **4-8**.

Figure **4-8** Smart Mode of DAY&NIGHT

4.4 Video Setting

Move the cursor to the VIDEO SETTING, and press the menu button to enter the video configuration interface. As shown in Figure **4-9**.
CONTRAST: Set the CONTRAST value from 1 to 10.
SHARPNESS: Set the edge and detail sharpness value from 1 to 10.

COLOR GAIN: Set the color gain from 1 to 10.
3D NR: Set the 3D NR level as **High**, **Middle**, and **Low**. Select **OFF** to disable the 3D NR.
MIRROR: Set the mirror mode as **OFF**, **H**, **V**, or **HV**.

VIDEO SETTING	
1. CONTRAST	1-|--10
2. SHARPNESS	↵
3. COLOR GAIN	1-|--10
4. 3D NR	OFF
5. MIRROR	OFF
6. RETURN	↵

Figure **4-9** Video Settings

4.5 FUNCTION

You can set **DETECTION**, **MASKING** , **ZOOM IN** and **LANGUAGE** of the camera in this menu.

FUNCTION	
1. DETECTION	↵
2. MASKING	↵
3. ZOOM IN	50-|--100
4. LANGUAGE	ENGLISH
5. RETURN	↵

Figure **4-10** Function

DETECTION: Set the motion sensitivity as **WEAK**, **LOW**, **MIDDLE** or **HIGH**. Select an AREA to enter the motion detection AREA menu. As shown in Figure **4-11**
AREA: Set the status as **OFF/ON**. Select a color for area border. Move the joystick up/down and right /left to set the horizon/vertical size and position. As shown in Figure **4-12**

DETECTION	
1. SENSITIVITY	HIGHT
2. AREA NO.0	↵
3. AREA NO.1	↵
4. AREA NO.2	↵
5. AREA NO.3	↵
6. RETURN	↵

Figure **4-11** Detection

AREA	
1. STATUS	OFF
2. COLOR	WHITE
3. HORIZON SIZE	0
4. VERTICAL SIZE	0
5. HORIZON MOVE	0
6. VERTICAL MOVE	0
7. RETURN	↵

Figure **4-12** Detection Are

MASKING: Select a masking back ground color. Select an AREA to enter the masking AREA menu. As shown in figure **4-13**
AREA: Set the status as **OFF/ON**. Move the joystick up/down and right/left to set the horizon/vertical size and position. As shown in Figure **4-14**

MASKING	
1. COLOR	WHITE
2. AREA NO.0	↵
3. AREA NO.1	↵
4. AREA NO.2	↵
5. AREA NO.3	↵
6. AREA NO.	↵
7. AREA NO.5	↵
8. AREA NO.6	↵
9. AREA NO.7	↵
10.RETURN	↵

Figure **4-13** Detection Area

AREA	
1. STATUS	OFF
2. HORIZON SIZE	0
3. VERTICAL SIZE	0
4. HORIZON MOVE	0
5. VERTICAL MOVE	0
6. RETURN	↵

Figure **4-14** Detection

ZOOM IN: The ZOOM IN value can be adjusted from 50 to 100.
LANGUAGE: Chinese and English are selectable.

4.6 Reset

Reset all the settings to the default.

4.7 Save & Exit

Move the cursor to **SAVE & RESET**, and press OK to save the settings and exit the menu.