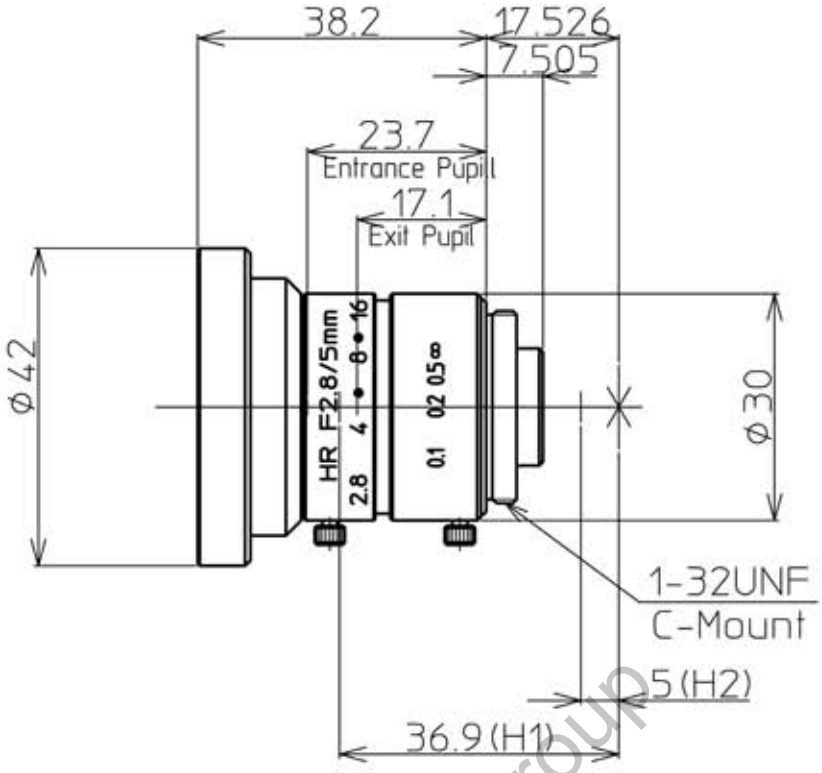

2/3" 2.8/5mm C		1/2"	1/3"
FOCAL LENGTH	f=5mm		
MAX. DIAMETER (RATIO)	F=1:2.8~16		
PICTURE SIZE	6.6x8.8mm	4.8x6.4	3.6x4.8
ANGLE VER. ANGLE	66.9°	51.3°	39.6°
HOR. ANGLE	82.4°	65.2°	51.3°
F.O.V. AT M.O.D.	196.8x147.6mm		
DISTORTION (TV)	-0.5%		
MINIMUM FOCUS DISTANCE	0.10m		
FLANGE BACK	17.526mm in air		
BACK FOCUS	10.2mm in air		
FILTER SCREW SIZE	M40.5x0.5		
FRONT/REAR EFFECTIVE DIA.	Front Φ28.0mm	Rear Φ10.0mm	
MOUNT	C-MOUNT		
EXIT PUPIL	-34.7		
TEMPERATURE RANGE	-10~+45°C		
RESOLUTION CENTER/CORNER	Center 120lp/mm	Corner 100lp/mm	
WEIGHT	85g		

Aegis Electronic Group
www.aegiselect.com

		LM5JC1M		
05.13.12		2/3" F2.8 f=5mm		