M159-HDV120F-001

HD CCTV

Digital Video Panoramic View Camera

OPERATION MANUAL

Thank you for choosing our high quality camera.
Before attempting to connect operate this unit, please read and follow these instructions.

CONTENTS

1. CAUTIONS

2. IMPORTANT SAFETY INSTRUCTIONS

3. FEATURES

4. EQUIPMENT AND ACCESSORIES

5. CAMERA COMPONENT DESCRIPTIONS

6. INSTALLATION

7. DIMENSIONS

8. SPECIFICATIONS

9. OSD MANUAL
   - Menu Structure
   - Function Description

CAUTION

These servicing instructions are for use by qualified service personnel only. To reduce the risk of electric shock do not perform any servicing other than that contained in the operating instructions unless you are qualified to do so.

Use Class 2 Power Supply Only

1. CAUTIONS

This device complies with Part 15 of the FCC Rules. Operation is subject to the following two conditions:

1. This device may not cause harmful interference.
2. This device must accept any interference received, including interference that may cause undesired operation.

Note

This equipment has been tested and found to comply with the limits for a Class A digital device, pursuant to part 15 of the FCC Rules. These limits are designed to provide reasonable protection against harmful interference when the equipment is operated in a commercial environment. This equipment generates, uses, and can radiate radio frequency energy and, if not installed and used in accordance with the instruction manual, may cause harmful interference to radio communications. Operation of this equipment in a residential area is likely to cause harmful interference in which case the user will be required to correct the interference at his own expense.

WARNING

This is a class A product. In a domestic environment this product may cause radio interference in which case the user may be required to take adequate measures.

Caution

Any changes or modifications in construction of this devices which are not expressly approved by the party responsible for compliance could void the user's authority to operate the equipment.

⚠ CAUTION

1. A regulated DC12V 1A power supply is recommended for use with this camera for the best picture and the most stable operation.
   An unregulated power supply can cause damage to the camera. When an unregulated power supply is applied, the product warranty will be void.
2. It is recommended that the camera be used with a monitor that has a CCTV quality 75 video impedance level. If your monitor is switched to high impedance then please adjust accordingly.
3. Do not attempt to disassemble the camera to gain access to the internal components. Refer servicing to your dealer.
4. Never face the camera towards the sun or any bright or reflective light, which may cause smears on the picture and possible damage to the image sensor.
5. **Do not remove the serial sticker for the warranty service.**
6. Do not expose the camera to rain or other types of liquid.
7. The apparatus must be connected to a main socket-outlet with a protective earth connection.

1. CAUTIONS

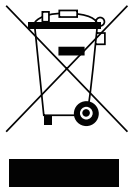

WEEE

(Waste Electrical & Electronic Equipment)

This marking shown on the product or its literature, indicates that it should not be disposed with other household wastes at the end of its working life. To prevent possible harm to the environment or human health from uncontrolled waste disposal, please separate this from other types of wastes and recycle it responsibly
to promote the sustainable reuse of material resources. Household users should contact either the retailer where they purchased this product, or their local government office, for details of where and how they can take item for environmentally safe recycling.
Business users should contact their supplier and check the terms and conditions of the purchase contract.
This product should not be mixed with other commercial wastes for disposal.

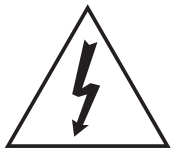

CAUTION

RISK OF ELECTRIC SHOCK DO NOT OPEN

CAUTION: TO REDUCE THE RISK OF ELECTRIC SHOCK, DO NOT REMOVE COVER (OR BACK). NO USER SERVICEABLE PARTS INSIDE. REFER SERVICING TO QUALIFIED SERVICE PERSONNEL

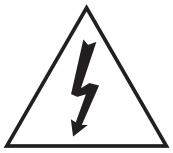

This symbol is intended to alert the user to the presence of un-insulated “dangerous voltage” within the product’s enclosure that may be of sufficient magnitude to constitute a risk of electric shock.

This symbol is intended to alert the user to the presence of important operating and maintenance (servicing) instructions in the literature accompanying the appliance.

2. IMPORTANT SAFETY INSTRUCTION

1) Read these instructions.

2) Keep these instructions.

3) Heed all warnings.

4) Follow all instructions.

5) Do not use this apparatus near water.

6) Clean only with dry cloth.

7) Do not block any ventilation openings. Install in accordance with the manufacturer's instructions.

8) Do not install near any heat sources such as radiators, heat registers, stoves, or other apparatus (including amplifiers) that produce heat.

9) Do not defeat the safety purpose of the polarized or grounding-type plug. A polarized plug has two blades with one wider than the other. A grounding type plug has two blades and a third grounding prong. The wide blade or the third prong are provided for your safety. If the provided plug does not fit into your outlet, consult an electrician for replacement of the obsolete outlet.

10) Protect the power cord from being walked on or pinched particularly at plugs, convenience receptacles, and the point where they exit from the apparatus.

11) Only use attachments/accessories specified by the manufacturer.

12) Use only with the cart, stand, tripod, bracket, or table specified by the manufacturer, or sold with the apparatus. When a cart is used, use caution when moving the cart/apparatus combination to avoid injury from tip-over.

13) Unplug this apparatus during lightning storms or when unused for long periods of time.

14) Refer all servicing to qualified service personnel. Servicing is required when the apparatus has been damaged in any way, such as power-supply cord or plug is damaged, liquid has been spilled or objects have fallen into the apparatus, the apparatus has been exposed to rain or moisture, does not operate normally, or has been dropped.

3. FEATURES

- **High Resolution.**
  SONY 1 / 3” Progressive Color CMOS Image Sensor. (3 Mega Pixel).

- **Support Various Digital Video Output.**
  1080p30, 1080p25

- **Video Outputs.**
  Primary HD-SDI (BNC)
  Test/Setup TV Out (Test Point-adapter to BNC included),
  NTSC/PAL selectable

- **360° Panorama HD-SDI Camera.**
  - Four PTZ Views - Two 180° Panorama Views
  - One 360° Panorama View with PAN

- **OSD menu for setup and configuration.**

- **Support RS485 Communucation Protocol for Camera Configuration Remote Control.**
  - PELCO-D , PELCO-P

- **Lens Control**
  Fisheye Lens Focal Length (1.25 mm)

- **Power Source :** DC 12V / AC24V

- **IP66 Weather Resistant.**

4. EQUIPMENT AND ACCESSORIES

Camera	
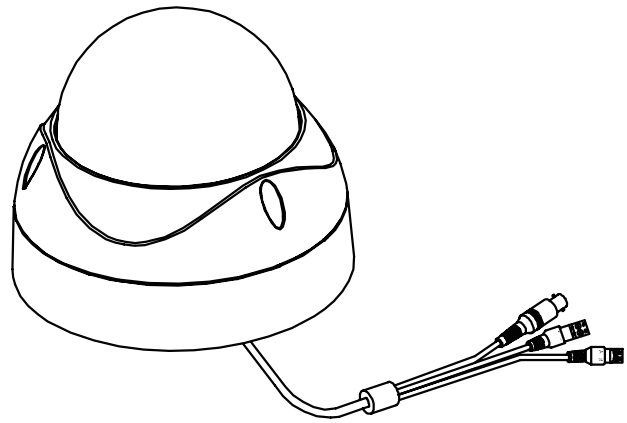	
Template	Manual
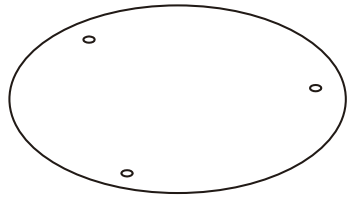	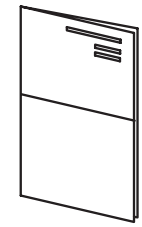
Screws / Plastic anchors / Wrench	Service Video Output Test Cable
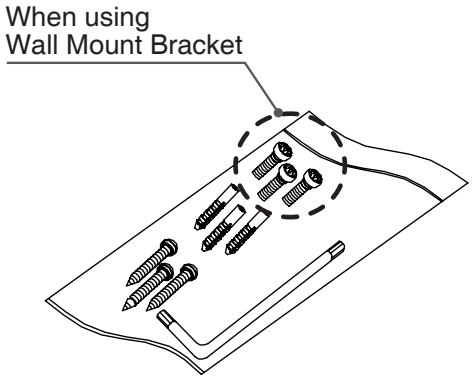	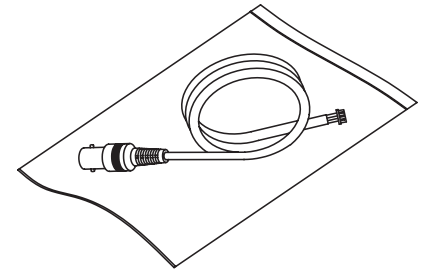

5. CAMERA COMPONENT DESCRIPTIONS

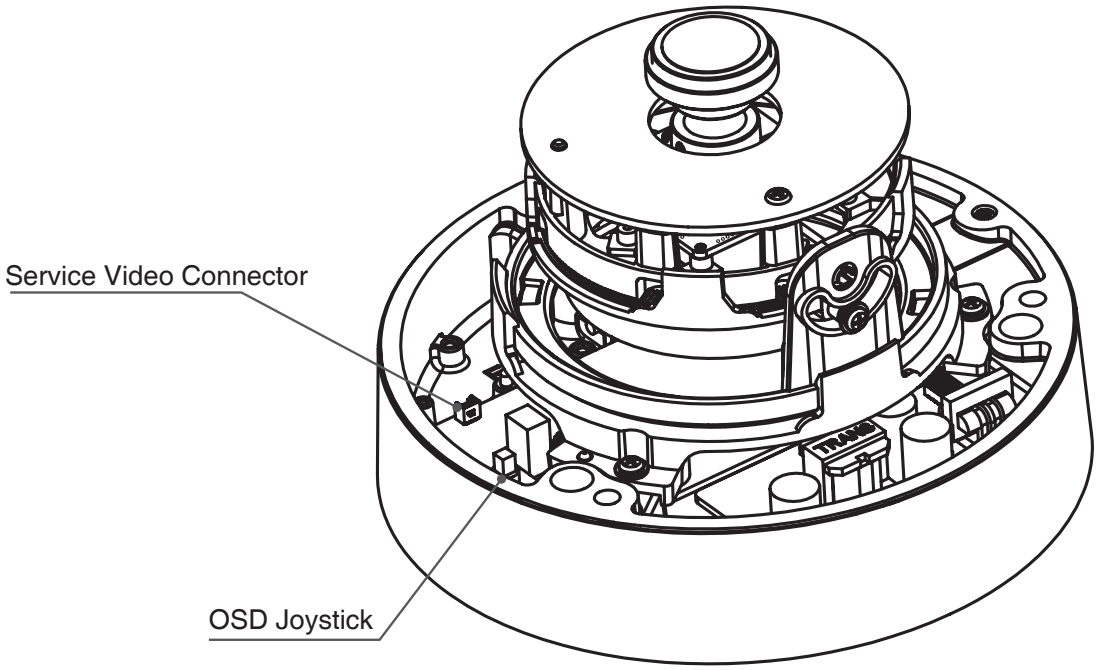

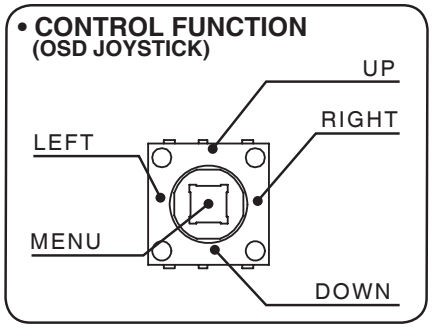

***PRESS INWARD FOR MENU**

6. INSTALLATION

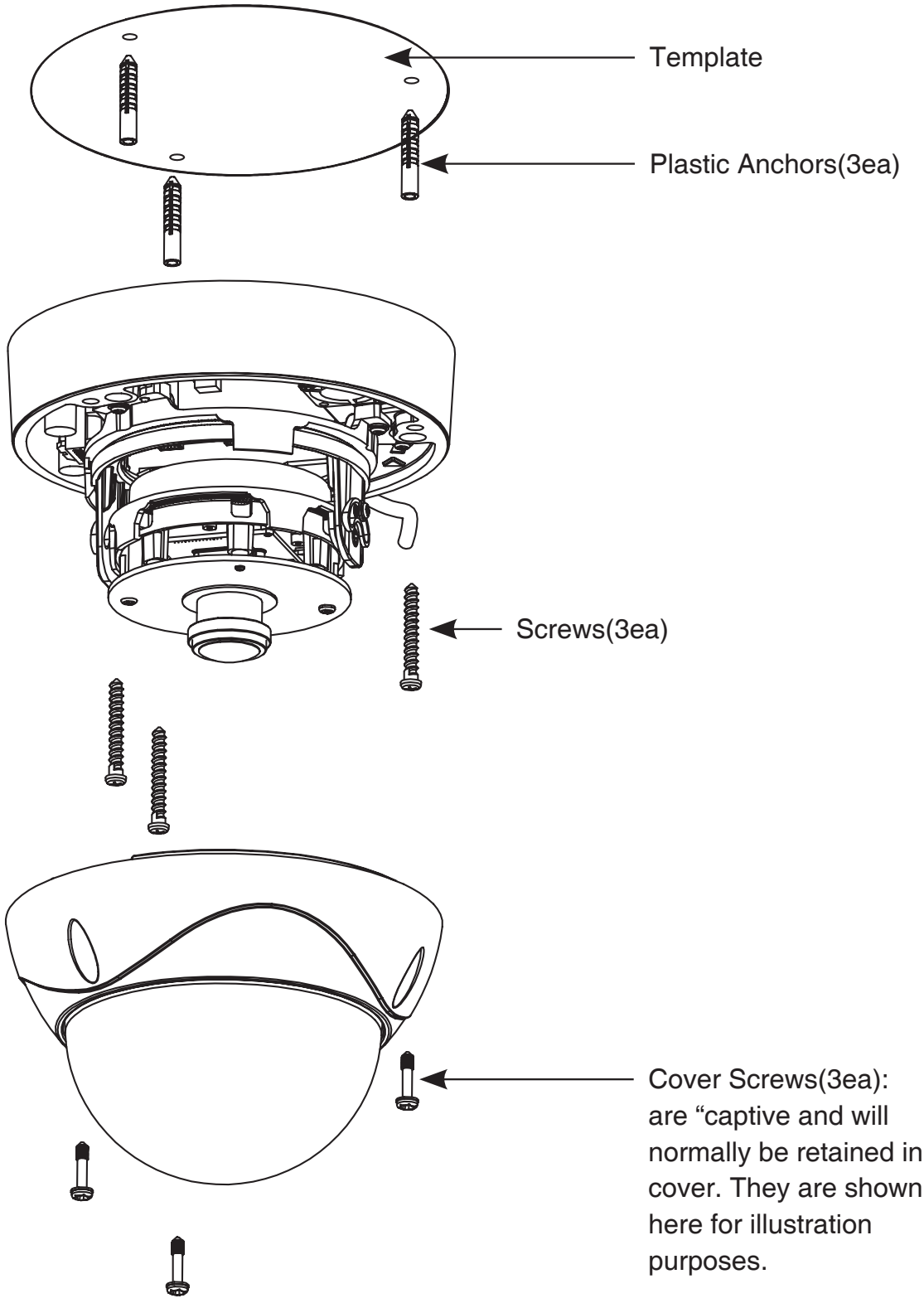

6. INSTALLATION

• MONITOR CONNECTION

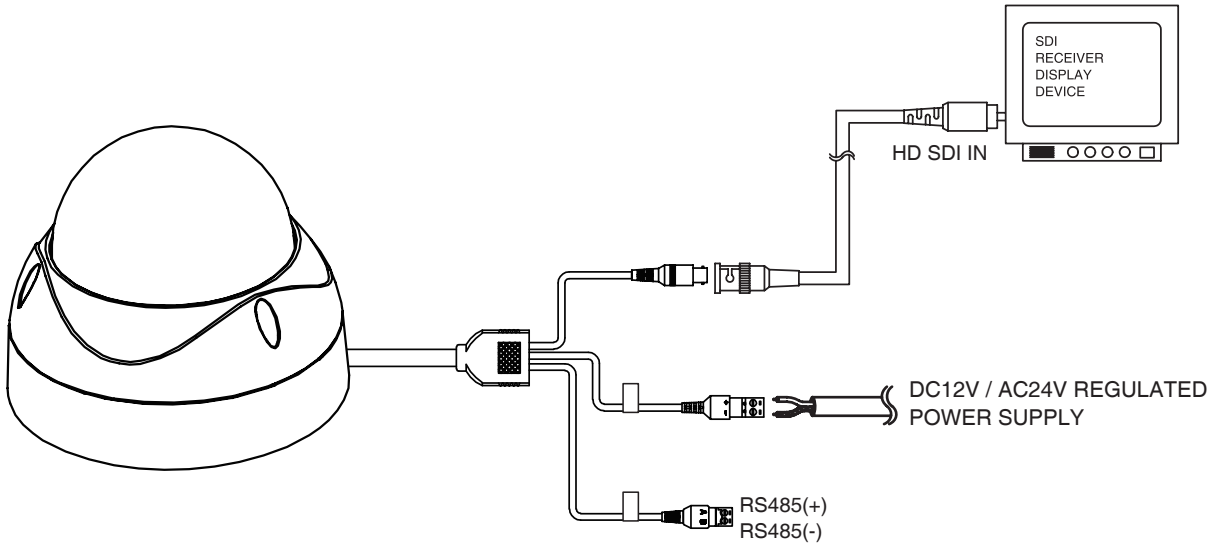

When you install the camera, please glue up the end of cable to keep it stable in order to protect the camera from the humidity problems.

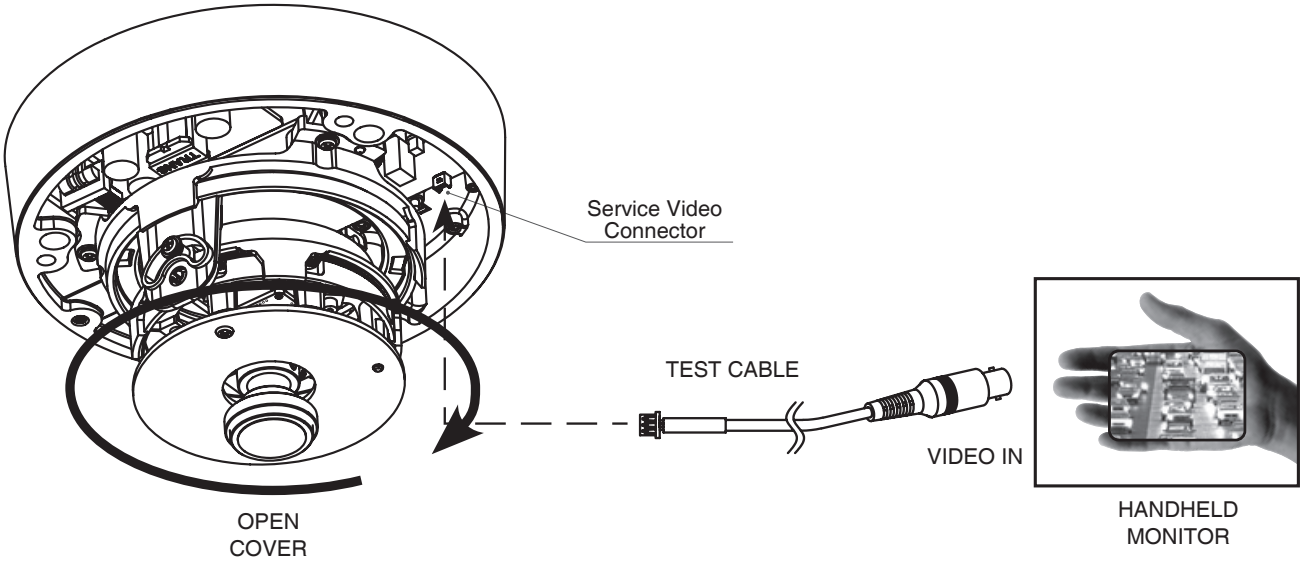

View of the most appropriate angle can be set.
Using the 1-axis 360° rotation function.

7. DIMENSIONS

Unit(mm)

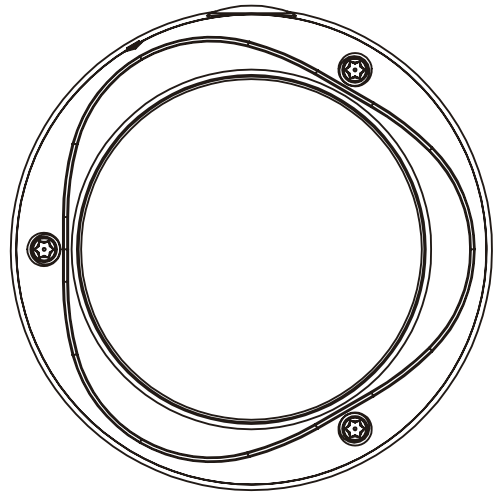

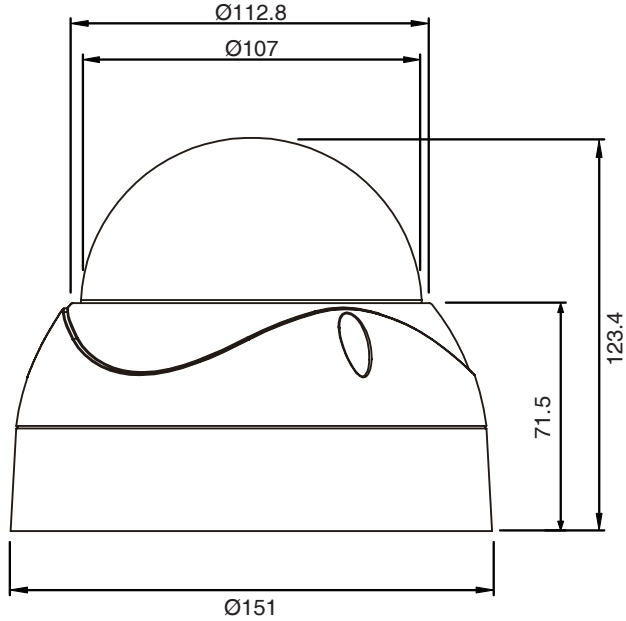

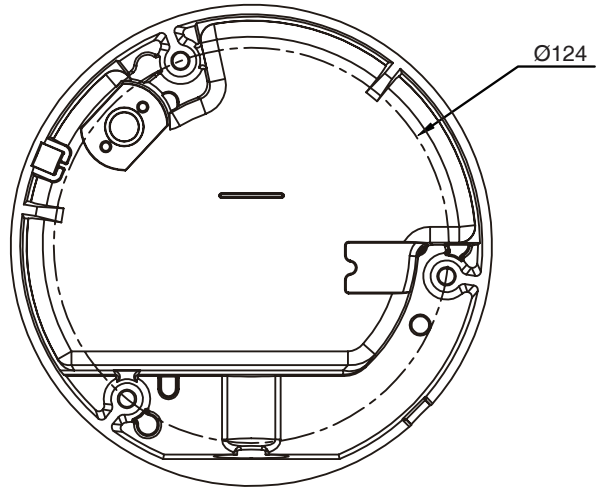

8. SPECIFICATIONS

Image Device	SONY 1 / 3” Progressive Color CMOS Image Sensor (3 Mega Pixel , 15 fps)
Effective Pixels	2096 (H) x 1561 (V)
Unit cell size(um)	2.5um (H) x 2.5um (V)
Video output mode	HD-SDI: 1080p30, 1080p25 TV Out: NTSC / PAL selectable
Output Mode	360° Panorama View / Four PTZ Views Two 180° Panorama Views / One 360° Panorama View with PAN
Minimum illumination	0.1 Lux
S/N Ratio	Max 50dB
Video output	HD-SDI / 1.0 Vp-p Composite (75Ω)
Lens	Fisheye Lens Focal Length (1.25 mm)
View Angle	360° (H) / 185° (V) (Original Views / Four PTZ Views) 360° (H) / 65° (V) (360° Panorama Views) 180° (H) / 65° (V) x 2 (180° Panorama Views)
PTZ	Digital
D-ZOOM	1X ~ 10X
Shutter speed	Auto / Manual selectable
Manual shutter speed	1/10000 sec
Flickerless	OFF / ON (60Hz / 50Hz) selectable
White Balance	ATW / Manual / Specific Color / Push
BLC	On / Off (by OSD)
OSD Menu	Yes
Power Consumption	DC 12V (±10%), Max.540mA AC 24V (±10%), Max.6.5W
Dimension	151(Ø) x 123.4(mm)
Weight	950g
Conformity	CE, FCC
IP Rating	IP66 (Weatherproof)
Temperature / Humidity (no condensing)	Operation : 14°F ~ 112°F (-10~50 / 20~80%) Storage : -4°F ~ 158°F (20~70 / 20~95%)

Specifications and designs are subject to change for improving the functionality of this product without notice.

9. OSD MANUAL

• Menu structure

- Panorama Mode Select

Main	Sub Menu	Sub Menu	
PANORAMA MODE SELECT	180° PANORAMA 360° PANORAMA	WINDOW SELECT	1 ~ 2
		FILP	ON / OFF
		MIRROR	ON / OFF
		POSITION INITIALIZE	
	1 REGION 1:ORIGINAL / 3:PTZ 4PTZ	WINDOW SELECT	1 ~ 4
		FILP	ON / OFF
		MIRROR	ON / OFF
		PTZ & ZOOM CONTROL	PAN & ZOOM CONTROL
			ZOOM IN / ZOOM OUT
		POSITION INITIALIZE	

- Camera setting

Main	Sub Menu
CAMERA SETTING	EXPOSURE
	WHITE BALANCE
	DAY & NIGHT
	IMAGE
	SYSTEM
	RESET DATA

- EXPOSURE Menu

Main	Sub Menu	Sub Menu				
EXPOSURE	SHUTTER	SHUTTER MODE	NORMAL AE	AE PRIORITY	NORMAL	
					GAIN	GAIN LEVEL: 0DB / 1.2DB / 3.31DB / 5.12DB / 6.92DB / 9.33DB 11.14DB / 12.94DB / 15.34DB / 17.16DB / 18.96DB / 21.37DB / 23.18DB / 25DB / 27.09DB / 29.2DB
					SHUTTER	SUTTER LEVEL: 1 ~ 160
			MANUAL	USER MODE		1 ~ 4
				GAIN LEVEL		1 ~ 150
				SHUTTER LEVEL		1 ~ 160
			AE HOLD			
	FLICKERLESS	OFF / 50HZ / 60HZ				
	BRIGHTNESS	0 ~ 255				
	AGC	0 ~ 186				
	BLC	ON / OFF				
	WDR	ON / OFF				

9. OSD MANUAL

- WHITE BALANCE Menu

Main	Sub Menu	Sub Menu		
WHITE BALANCE	WB MODE	ATW	ATW MODE	INDOOR / OUTDOOR
		MANUAL	R GAIN	0 ~ 255
			B GAIN	0 ~ 255
		SPECIFIC COLOR	TARGET TEMP	1500K / 1567K / 1641K / 1721K / 1810K / 1909K / 2019K / 2143K / 2283K / 2242K / 2625K / 2838K / 3088K / 3387K / 3705K / 4200K / 4773K / 5526K / 6563K / 8077K / 10500K / 15000K
		PUSH		

- DAY & NIGHT Menu

Main	Sub Menu	Sub Menu		
DAY & NIGHT	DAY & NIGHT	AUTO	DELY TIME	0 ~ 10
			DAY THRESHOLD	0 ~ 255
			NIGHT THRESHOLD	0 ~ 255
		BW		
		COLOR		

- IMAGE Menu

Main	Sub Menu	Sub Menu	
IMAGE	GAMMA	Y GAMMA	PRESET 0 ~ PRESET 3
		C GAMMA	PRESET 0 ~ PRESET 3
	SHARPNESS	0 ~ 31	
	CONTRAST	0 ~ 31	
	SATURATION	0 ~ 31	
	DNR	OFF / LOW / MIDDLE / HIGH	

- SYSTEM Menu

Main	Sub Menu	Sub Menu	
SYSTEM	FIRMWARE VER		
	COMMUNICATION	CAMERA ID	GROUP 1 ~ GROUP 51
		BAUD RATE	2.4K / 4.8K / 9.6K / 19.2K / 38.4K / 57.6K
		COMM APPLY	
	SDI FRAME RATE	30HZ / 25HZ	
	CVBS FORMAT	NTSC / PAL	
	FACTORY RESET		

9. OSD MANUAL

• Function Description

MAIN MENU

- PANORAMA MODE SELECT
  : Panorama Mode Select.
- WHITE BALANCE
  : Basic CAMERA FUNCTION Setting.

MAIN MENU

+ PANORAMA MODE SELCET
+ CAMERA SETTING

* EXIT

PANORAMA MODE SELECT

PANORAMA MODE

+ 180 PANORAMA
+ 360 PANORAMA
+ 1 REGION
+ 1: ORIGINAL / 3 : REGION
+ 4 PTZ

* EXIT

- 180 Panorama:
  Use the SET button to select Fisheye Corrected Mode With 180° Panorama.
- 360° PANORAMA:
  Use the SET button to select Fisheye Corrected Image Mode.
- 1 REGION:
  Use the SET button to select 1 Region Image.
- 1 : ORIGINAL / 3 : PTZ:
  Use the SET button to select 1 Windows : Original Image + 3 Region Window Image
- 4 PTZ: Use the SET button to select 4 Region Image.

PTZ & ZOOM MODE (Sub Menu)

PTZ & ZOOM MODE

* WINDOW SELECT:

+ FLIP
+ MIRROR
+ PAN & TILT CONTROL

+ POSITION INITIALIZE

* ESC
* EXIT

- WINDOW SELECT: Use the LEFT/RIGHT button to select the PTZ Control Window.
Control Available Window

Mode	Window Number.
1 Region	1
4 Region	1 ~ 4
1 : ORG / 3 Region	2 ~ 4
180 Panorama	1 ~ 2
360 Panorama	1

- FLIP: Use the LEFT/RIGHT button to select ON/OFF the H-Flip Control
- MIRROR: Use the LEFT/RIGHT button to select ON/OFF the MIRROR Control
- PAN&TILT CONTROL: Use the SET button to go to the PAN & TILT CONTROL sub menu. (only in the 1 : ORG / 3 Region , 4 Region , 1 Region Mode).
- POSITION INITIALIZE: Use the SET button to action start of Current Mode Data Reset.

PAN & TILT CONTROL (Sub Menu)

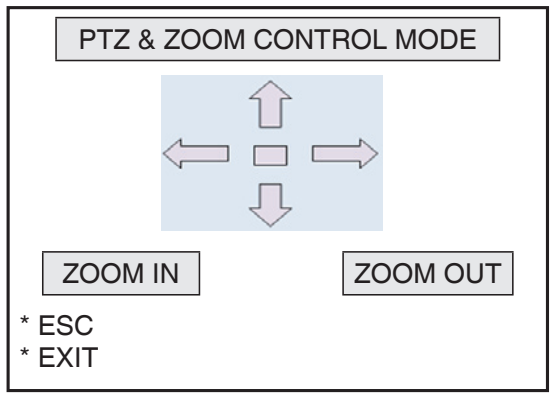

- PAN & TILT CONTROL: Use the OSD Joystick button to action of PAN & TILT Control.
- ZOOM CONTROL: Use the SET button to action of ZOOM IN / OUT.
Zoom Ratio : 1X ~ 10X

9. OSD MANUAL

• Function Description

CAMERA SETTING

```
CAMERA SETTING

+ EXPOSURE
+ WHITE BAMANCE
+ DAY & NIGHT
+ IMAGE
+ SYSTEM
+ RESET DATA

* ESC
* EXIT
```

- EXPOSURE: Adjust exposure control
- WHITE BALANCE: Adjust white balance control
- DAY & NIGHT: Day & Night control
- IMAGE: Apply image processing effects
- SYSTEM: System information & setting
- RESET DATA: Reset camera's all feature data to default value.
- EXIT: Close OSD menu.

EXPOSURE

```
EXPOUSE
+ SHUTTER
+ FLICKERLESS          OFF
+ BRIGHTNESS            30
+ AGC                  140
+ BLC                  OFF
+ WDR                  OFF

* ESC
* EXIT
```

- SHUTTER: Use the SET button to go to the SHUTTER sub menu.
- FLICKERLESS: Use the LEFT/RIGHT button to select the flickerless control setting
  - OFF, 60Hz, 50Hz
- BRIGHTNESS: Use the LEFT/RIGHT button to adjust the brightness reference level
- AGC: Use the LEFT/RIGHT button to adjust the AGC max value.
- BLC: Use the LEFT/RIGHT button to select ON/OFF the Back-Light Compensation control
- WDR: Use the LEFT/RIGHT button to select ON/OFF the Wide Dynamic Range effect control

9. OSD MANUAL

SHUTTER (Sub Menu)

```
SHUTTER
+ SHUTTER MODE        NORMAL AE
+ AE PRIORITY         NORMAL

* ESC
* EXIT
```

```
SHUTTER
+ SHUTTER MODE        NORMAL AE
+ AE PRIORITY         GAIN
+ GAIN LEVEL          0 DB

* ESC
* EXIT
```

```
SHUTTER
+ SHUTTER MODE        NORMAL AE
+ AE PRIORITY         SHUTTER
+ SHUTTER LEVEL       25

* ESC
* EXIT
```

```
SHUTTER
+ SHUTTER MODE        AE HOLD

* ESC
* EXIT
```

```
SHUTTER
+ SHUTTER MODE        NORMAL
+ USER MODE           1
+ GAIN LEVEL          20
+ SHUTTER LEVEL       50

* ESC
* EXIT
```

- SHUTTER MODE: Use the LEFT/RIGHT button to select shutter & gain control mode
  - NORMAL AE, AE HOLD, MANUAL
- AE PRIORITY: This menu can be accessed when the SHUTTER MODE is set to NORMAL AE. Use the LEFT/RIGHT button to select the AE control priority setting.
  - NORMAL, GAIN, SHUTTER
- USER MODE: This menu can be accessed when the SHUTTER MODE is set to MANUAL. Use the LEFT/RIGHT button to select the user mode(1~4) to save setting.
- GAIN LEVEL: In GAIN priority mode at NORMAL AE mode. this menu can be accessed when the SHUTTER MODE is set to NORMAL AE and AE PRIORITY is set to GAIN. Use the LEFT/RIGHT button to select the Gain value setting.
- GAIN LEVEL: In MANUAL mode. This menu can be accessed when the SHUTTER MODE is set to MANUAL. Use the LEFT/RIGHT button to select the Gain level setting.
- SHUTTER LEVEL: This menu can be accessed when the SHUTTER MODE is set to MANUAL. Use the LEFT/RIGHT button to select the Shutter level setting.

9. OSD MANUAL

WHITE BALANCE

WHITE BALANCE	
+ WB MODE	ATW
+ ATW MODE	INDOOR
* ESC	
* EXIT	

WHITE BALANCE	
+ WB MODE	SPECIFIC COLOR
+ TARGET TEMP	3387K
* ESC	
* EXIT	

WHITE BALANCE	
+ WB MODE	MANUAL
+ R GAIN	48
+ B GAIN	64
* ESC	
* EXIT	

WHITE BALANCE	
+ WB MODE	PUSH
* ESC	
* EXIT	

- WB MODE : Use the LEFT/RIGHT button to select White balance modes
– ATW, MANUAL, SPECIFIC COLOR, PUSH

ATW	Auto trace white balance mode
MANUAL	Manual white balance mode
SPECIFIC COLOR	Manual setting with target color temperature
PUSH	White Balance Push mode to Auto AWB

- ATW MODE : This menu can be accessed when the WB MODE is set to ATW.
Use the LEFT/RIGHT button to select environment setting.
- INDOOR, OUTDOOR

- TARGET TEMP : This menu can be accessed when the WB MODE is set to SPECIFIC COLOR.
Use the LEFT/RIGHT button to select target color temperature.

- R GAIN : This menu can be accessed when the WB MODE is set to MANUAL.
Use the LEFT/RIGHT button to adjust the Red Gain.

- B GAINL : This menu can be accessed when the WB MODE is set to MANUAL.
Use the LEFT/RIGHT button to adjust the Red Gain.

9. OSD MANUAL

DAY & NIGHT

```
DAY & NIGHT
+ DAY & NIGHT                AUTO

+ DELAY TIME                 3 SEC
+ DAY THRESHOLD              101
+ NIGHT THRESHOLD            188


* ESC
* EXIT
```

```
DAY & NIGHT
+ DAY & NIGHT                COLOR



* ESC
* EXIT
```

```
DAY & NIGHT
+ DAY & NIGHT                BW



* ESC
* EXIT
```

- DAY & NIGHT : Use the LEFT / RIGHT button to select Day & Night modes – AUTO, COLOR, BW

AUTO	Auto controlled by AGC level in the processor.
COLOR	Fixed Day State. Color Image.
BW	Fixed Night State. BW Image.

- DELAY TIME : This menu can be accessed when the DAY & NIGHT is set to AUTO. Use the LEFT/RIGHT button to select state change delay time.
- DAY THRESHOLD : This menu can be accessed when the DAY & NIGHT is set to AUTO. Use the LEFT/RIGHT button to select threshold value of change from night state to day state.
- NIGHT THRESHOLD : This menu can be accessed when the DAY & NIGHT is set to AUTO. Use the LEFT/RIGHT button to select threshold value of change from day state to night state.

9. OSD MANUAL

IMAGE

IMAGE	
+ GAMMA	
+ SHARPNESS	7
+ CONTRAST	17
+ SATURATION	18
+ DNR	OFF
* ESC	
* EXIT	

- GAMMA: Use the SET button to go to the GAMMA sub menu.
- SHARPNESS: Use the LEFT/RIGHT button to adjust the sharpness value.
- CONTRAST: Use the LEFT/RIGHT button to adjust the contrast value.
- SATURATION: Use the LEFT/RIGHT button to adjust the saturation level.
- DNR: Use the LEFT/RIGHT button to select the digital noise reduction level. - OFF, LOW, MIDDLE, HIGH

GAMMA (Sub Menu)

GAMMA	
+ Y GAMMA	PRESET 2
+ C GAMMA	PRESET 3
* ESC	
* EXIT	

- Y GAMMA: Use the LEFT/RIGHT button to select preset gamma setting for luma.
- C GAMMA: Use the LEFT/RIGHT button to select preset gamma setting for chroma.

SYSTEM

SYSTEM	
+ FIRMWARE VER	3.07D.02F
+ COMMUNICATION	
+ SDI FRAME RATE	30HZ
+ CVBS FORMAT	NTSC
+ FACTORY RESET	
* ESC	
* EXIT	

- FIRMWARE VER: Information of camera's firmware version.
- COMMUNICATION: Use the SET button to go to the COMMUNICATION sub menu.
- SDI FRAME RATE: Use the LEFT/RIGHT button to select the SDI output video frame rate - 30HZ , 25HZ
- CVBS FORMAT: Use the LEFT/RIGHT button to select the TV out video format - NTSC, PAL
- FACTORY RESET: Use the SET button to action start of reset.
  Clear all setting and initialize to factory setting.

COMMUNICATION (Sub Manu)

```
COMMUNICATION

* CAMERA ID                GROUP.  1
+ BAUD RATE                     9.6K

* COMM APPLY



* ESC
* EXIT
```

- CAMERA ID : Use the LEFT/RIGHT button to select the RS485 ID Address Group.
ID Group : 1 ~ 51

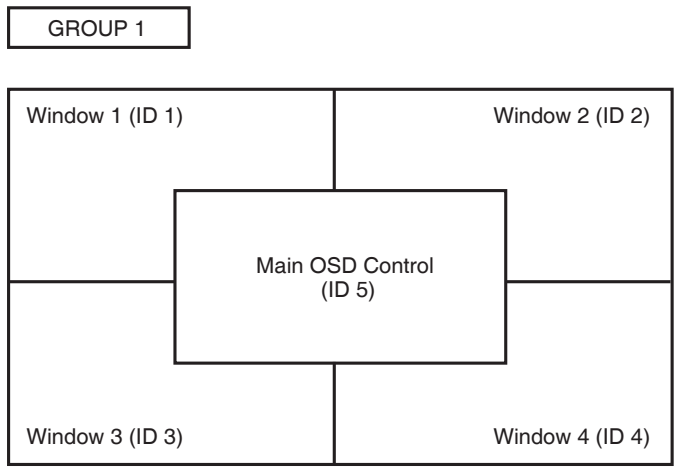

Camera ID Chart

	GROUP 1 (Camera 1)	GROUP 2 (Camera 2)	GROUP 3 (Camera 3)	GROUP 4 (Camera 4)	....	GROUP 51 (Camera 51)
Window 1(PTZ)	ID 1	ID 6	ID 11	ID 16	....	ID 251
Window 2(PTZ)	ID 2	ID 7	ID 12	ID 17	....	ID 252
Window 3(PTZ)	ID 3	ID 8	ID 13	ID 18	....	ID 253
Window 4(PTZ)	ID 4	ID 9	ID 14	ID 19	....	ID 254
Main OSD Control	ID 5	ID 10	ID 15	ID 20	....	ID 255

- BAUD RATE : Use the LEFT/RIGHT button to select the baudrate setting for RS485 communication.
- COMM APPLY : Apply all communication setting changed at once. Use the SET button to apply.

EXIT

SAVE & EXIT SETUP

EXIT WITHOUT SAVING

This menu can be accessed when use the EXIT action in all menu pages.

- SAVE & EXIT SETUP : Save all current setting and Close OSD menu. These setting are loaded and applied automatically when the Camera is power on.
  Use the SET button to action.
- EXIT WITHOUT SAVING : Close OSD menu. Camera's current setting is not saved.
  Use the SET button to action.