H1620KP

f = 16.0mm F2.0 Megapixel lens
for 1/2 type Format Board Cameras, No Iris

Model No.		H1620KP		Effective Lens Aperture	Front	φ11.8mm	
Focal Length		16.0mm			Rear	φ8.0mm	
Max. Aperture Ratio		1:2.0		Distortion		−0.4% (y=4)	
Max. Image Format		6.4mm x 4.8mm(φ8mm)		Back Focal Length		11.68mm	
Operation Range	Iris	—		Flange Back Length		—	
	Focus	0.1m - Inf.		Mount		M12 P=0.5mm	
Object Dimention at M.O.D.	1/2 type	4.0cm x 3.0cm (φ15.0)		Dimensions		φ17.0mm x 21.4mm	
	1/3 type	3.0cm x 2.3cm (φ3.8)		Weight		7.0g	
Coating		MgF2 Single Coat (All Surfaces λ = 510nm)					
Angle of View	D	1/2 type	27.9°	1/3 type	21.2°	1/4 type	16.0°
	H		22.6°		17.0°		12.8°
	V		17.0°		12.8°		9.6°

Aegis Electronic Group
www.aegiselect.com
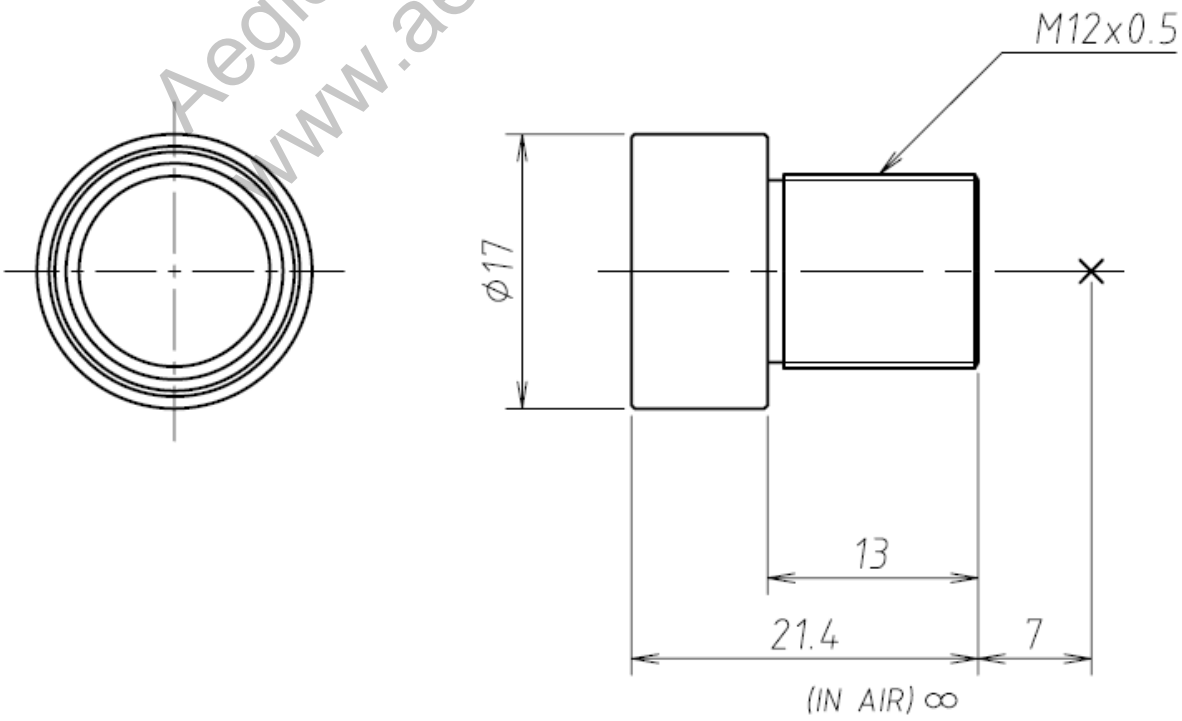
Dimensions