Full Configuration
Part Numbers:

MVB-EP-F-(XX)-(Y)
1 Bitmaxx EP base cable, MDR to MDR
1 Bitmaxx EP full cable, MDR to MDR
1 Power supply (supplies power to both cables)

MVB-EPMC-F-(XX)-(Y)
1 Bitmaxx EP base cable
HDR (Camera side) to MDR (FG side)
1 Bitmaxx EP full cable
HDR (Camera side) to MDR (FG side)
1 Power supply (supplies power to both cables)

MVB-EPMF-F-(XX)-(Y)
1 Bitmaxx EP base cable
HDR (FG side) to MDR (Camera side)
1 Bitmaxx EP full cable
HDR (FG side) to MDR (Camera side)
1 Power supply (supplies power to both cables)

MVB-EPMM-F(XX)-(Y)
1 Bitmaxx EP base cable, HDR to HDR
1 Bitmaxx EP full cable, HDR to HDR
1 Power supply (supplies power to both cables)

Aegis Electronic Group
www.aegiselect.com

***See Performance chart below for Length vs Speed.**
For MDR-MDR configurations only.

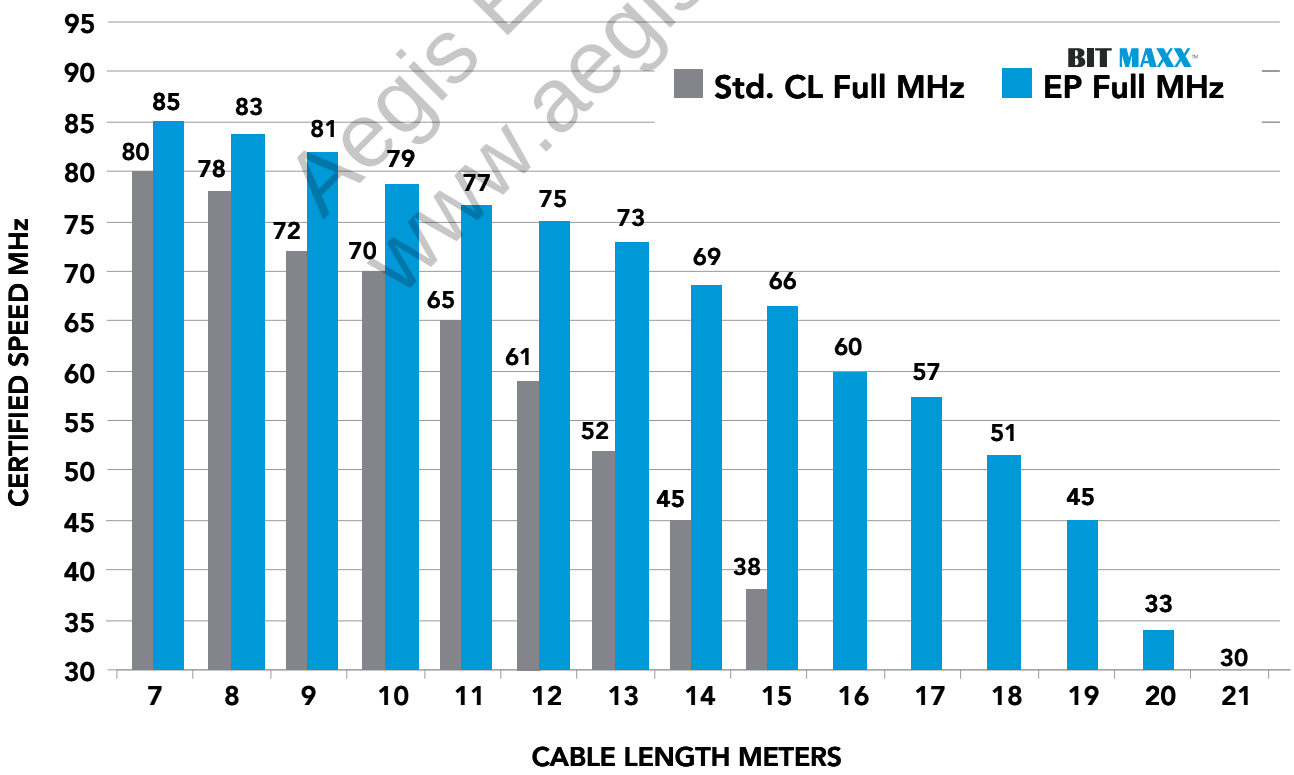

BITMAXX

ULTIMATE PERFORMANCE
EXTENDED DISTANCE CAMERA LINK MVB-P

Exclusive NEW technology which allows you to extend your Camera Link cable to 25 Meters @ 85MHz without the use of repeaters and their associated hardware! A simplified solution. The kit contains the following:

BASE VERSION

- (1) Power supply: Desktop - Switching type
- (1) 18 Meter CL line conditioner cable HIFLEX design 10,000,000 tick-tock cycles
- (1) 7 Meter CL cable MDR 26P male end HIFLEX design 10,000,000 tick-tock cycles

FULL VERSION

- (2) Power supply: Desktop - Switching type
- (2) 8 Meter CL line conditioner cable HIFLEX design 10,000,000 tick-tock cycles
- (2) 7 Meter CL cable MDR 26P male end HIFLEX design 10,000,000 tick-tock cycles

Input 120V AC cord NOT included.

Aegis Electronic Group
www.aegiselect.com

BASE VERSION MVB-P-B-18-7

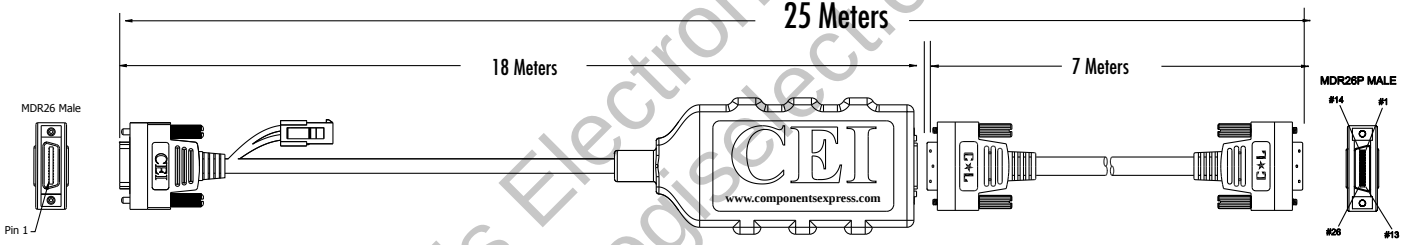

FULL VERSION MVB-P-F-8-7

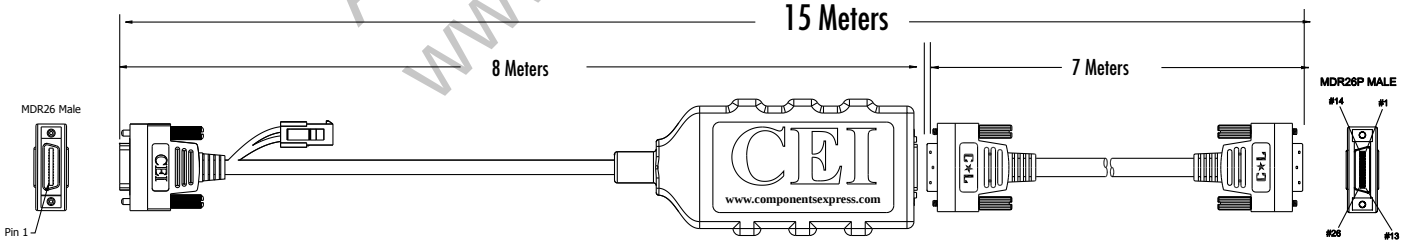

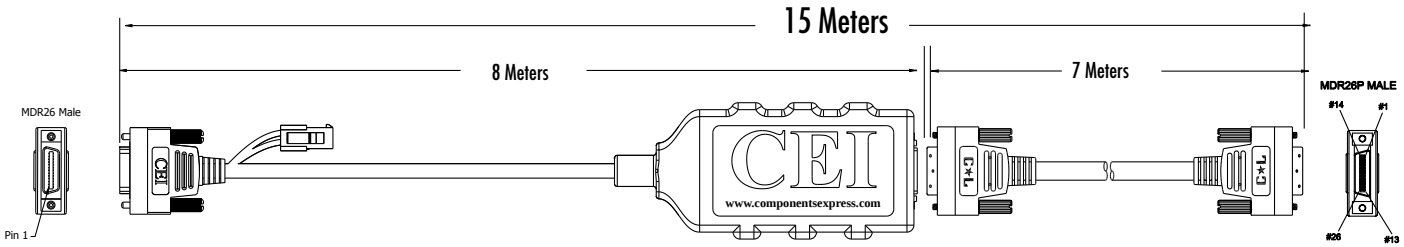

BITMAXX

USB3 VISION

BIT MAXX™

FEATURES:

- Extended distance up to 25 meters
- USB 3.0 Vision systems compatible (only)
- High Flex congurations available
- Cost effective modular design
- EZ install – Plug-N-Play
- Superspeed (5Gbps)
- Improved serviceability
- No external power supply required
- Provides for a variety of exit options @ camera side (sold separately)
- Adaptable to USB Type-B or Micro-B
- Standard 2-year warranty

Part Number:
MVB-USB3-XX

KIT INCLUDES:

1 Bitmaxx cable for USB3 Vision
1 PCIe USB3 host controller
with installation CD and hardware
1 USB 3.0 cable 1M, Micro B – Type A,
with M2 thumbscrews on each end

Installation Instructions:

1) Install the USB3 host controller card
2) Attach cable host end (Fig A) to USB3 host controller port
3) Attach pigtail (Fig B) to an adjacent USB2 or USB3 port
4) Connect USB3 cable between the device end and the camera
   - *Recommended cable length of 1 meter or less*
5) Your Bitmaxx cable for USB3 Vision is ready for use

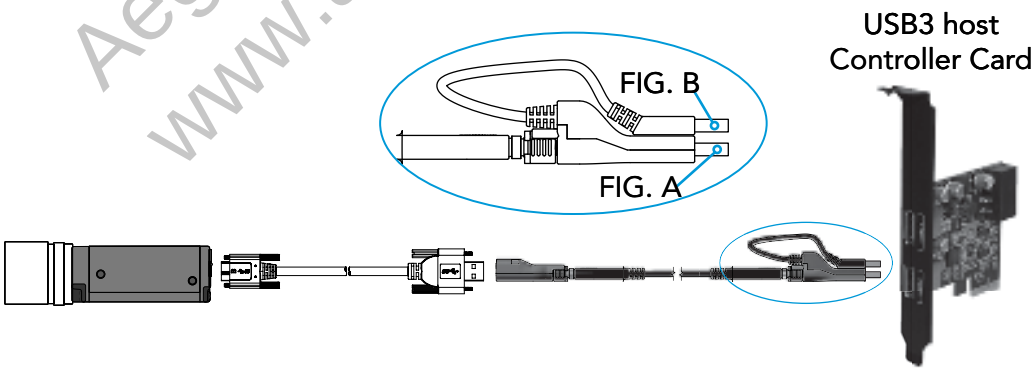

Technical Specifications:

- Output Voltage: 5 VDC
- Output Current: 1.5 A
- Operating Range: -20˚ C to +80˚ C
- Minimum Bend Radius: 50mm
- Coaxial Design
- Not compatible with USB 2.0

System Requirements:

- PCIe Gen2 or later slot for USB3 Host Controller (included)

Aegis Electronic Group
www.aegiselect.com

INTERNAL CAMERA LINK CABLES

INTERNAL RIBBON CABLE APPLICATIONS

PART NUMBER REFERENCE **I C L - X - X - X - ( ) M**

Select Connector Type: End "1"

MDR Female Straight Exit = 1
MDR Male Low Profile R/A Exit ***UP*** = 2
MDR Male Low Profile R/A Exit ***DOWN*** = 3
HDR / SDR Male Low Profile R/A Exit ***UP*** = 4
HDR / SDR Male Low Profile R/A Exit ***DOWN*** = 5
MDR Male Straight Exit = 6
HDR / SDR Female R/A ***UP*** w/Standoffs = 7
HDR / SDR Female R/A ***DOWN*** w/Standoffs = 8
HDR / SDR Male Straight Exit Recessed Screws = 9

Cable Type Options:

Pleated Foil Shielded Ribbon = 1

Select Connector Type: End "2"

MDR Female Straight Exit = 1
MDR Male Low Profile R/A Exit ***UP*** = 2
MDR Male Low Profile R/A Exit ***DOWN*** = 3
HDR / SDR Male Low Profile R/A Exit ***UP*** = 4
HDR / SDR Male Low Profile R/A Exit ***DOWN*** = 5
MDR Male Straight Exit = 6
HDR / SDR Female R/A ***UP*** w/Standoffs = 7
HDR / SDR Female R/A ***DOWN*** w/Standoffs = 8
HDR / SDR Male Straight Exit Recessed Screws = 9

Physical:

Cable Color:	Gray
Shell Color:	Black
Shell Construction:	Pre-molded in Polyethelene, fully shielded and over-molded in black PVC.
Cable construction:	Utilizes pleated foil shielded ribbon

Option: Length in Meters

ICL Ribbon Cables are currently available in a standard length of 0.2 to 0.6 meters (8" to 24"). Call for custom length applications.

Aegis Electronic Group
www.aegiselect.com

REV. C

CONNECTOR TYPE OPTIONS:

1 MDR Female Straight Exit w/Removeable Hardware

2 MDR Male Low Profile R/A Exit UP

3 MDR Male Low Profile R/A Exit DOWN

4 HDR / SDR Male Low Profile R/A Exit UP

5 HDR / SDR Male Low Profile R/A Exit DOWN

6 MDR Male Straight Exit

7 HDR / SDR Female R/A UP w/Removeable Hardware

8 HDR / SDR Female R/A DOWN w/Removeable Hardware

9 HDR / SDR Male Straight Exit w/Recessed Screws

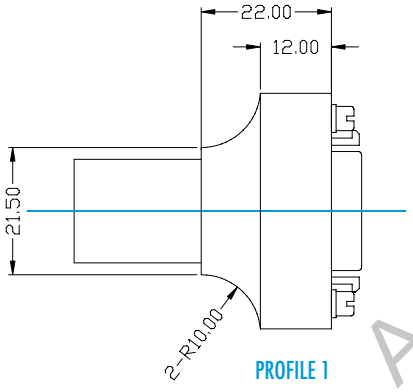

PROFILE 1

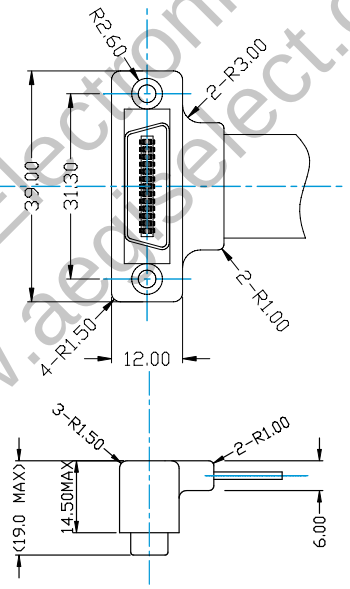

PROFILE 2 & 3

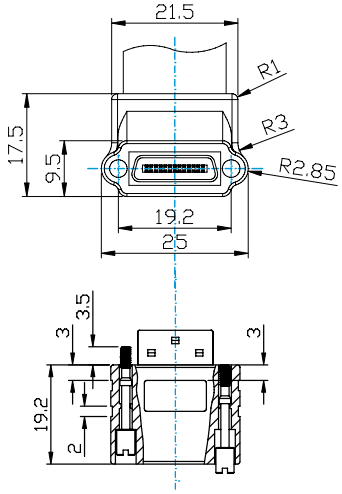

PROFILE 4 & 5

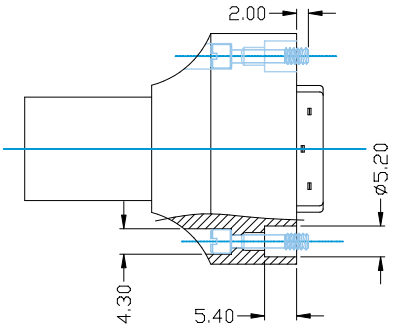

PROFILE 6

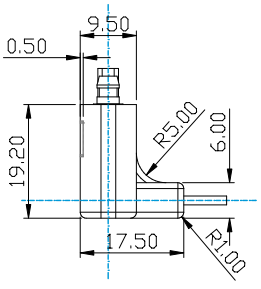

PROFILE 7 & 8

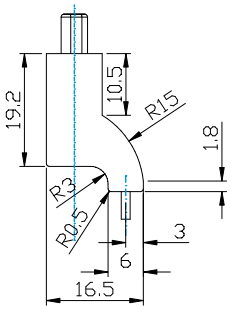

PROFILE 9

REV. C

Aegis Electronic Group
www.aegiselect.com

M 1 2
INDUSTRIAL CABLES

PART NUMBER REFERENCE **M I - X X - X X - X X - ( ) M**

Select Connector Type: End "1"

REFER TO GigE PAGE 6 = RJ
5P Male = A
5P Female = B
8P Male = C
8P Female = D
12P Male = E
12P Female = F
17P Male = G
17P Female = H

Connector Orientation for Types A-H:

Straight = 0
R/A *UP* = 1
R/A *RIGHT* = 3
R/A *DOWN* = 5
R/A *LEFT* = 7

Cable Type Options:

28 AWG x 5C = 1
28 AWG x 8C = 2
24 AWG x 12C = 3
28 AWG x 17C = 4
CAT 6 SSTP G1 = 5

Select Connector Type: End "2"

5P Male = A
5P Female = B
8P Male = C
8P Female = D
12P Male = E
12P Female = F
17P Male = G
17P Female = H
Flying Leads = X

Option: Length in Meters

Aegis Electronic Group
www.aegiselect.com

REV. C

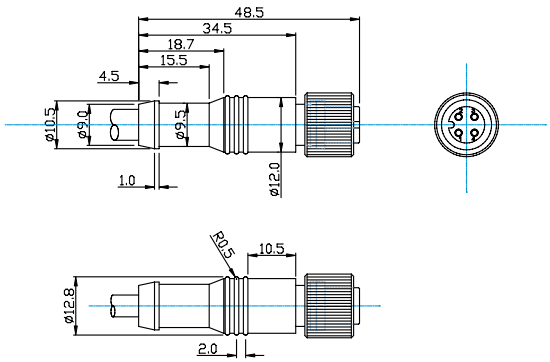

M12 Straight
PROFILE

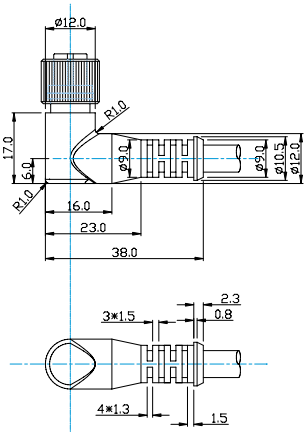

M12 R/A
PROFILE

MI-10-5-C-( )M

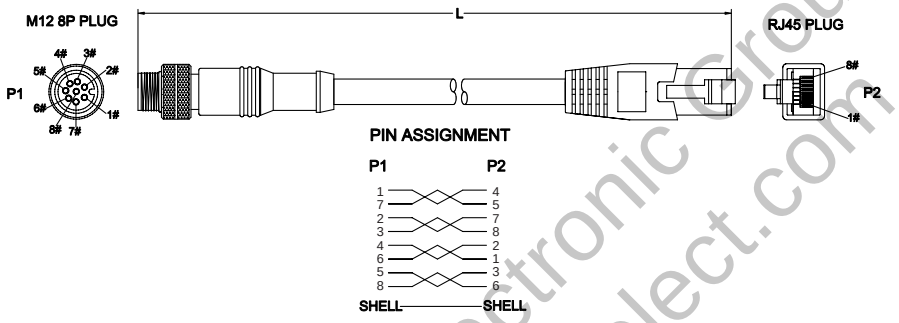

MI-10-5-C5-( )M

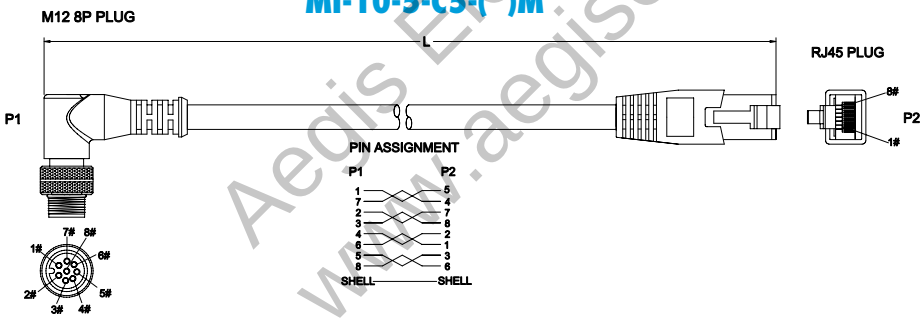

MI-C-2-X-( )M

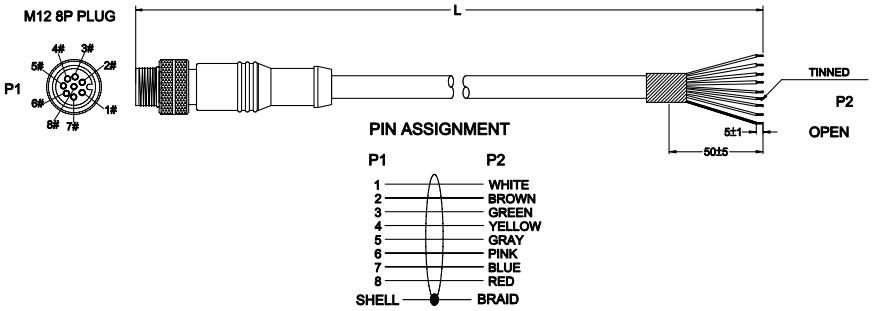

Aegis Electronic Group
www.aegiselect.com

MI-C5-2-X-( )M

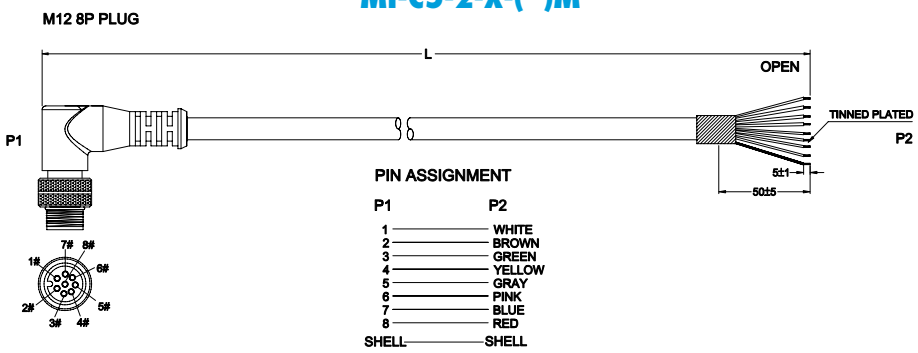

MI-A0-1-X-( )M

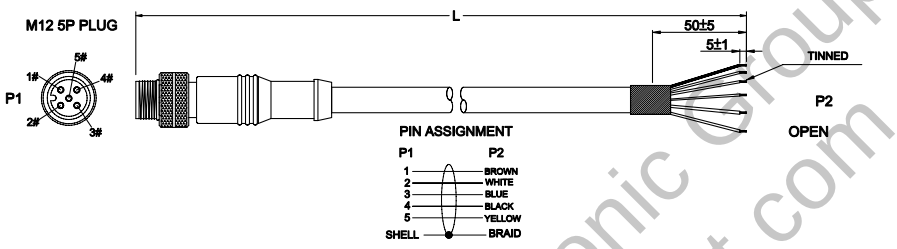

MI-A5-1-X-( )M

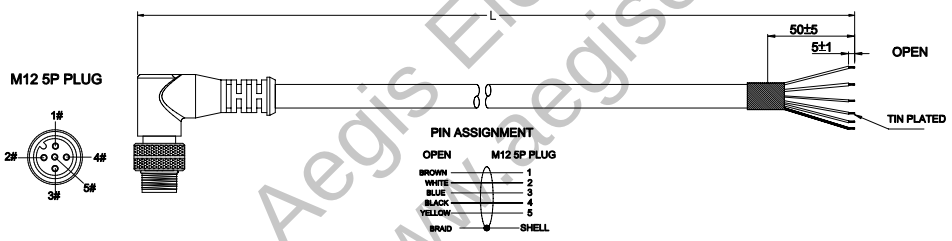

MI-F0-3-X-( )M

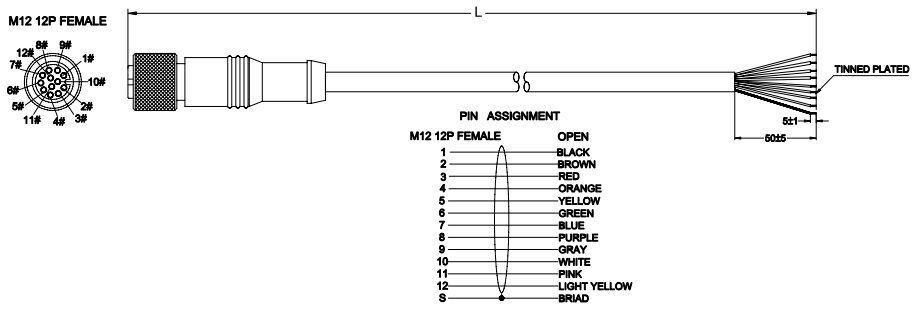

Aegis Electronic Group
www.aegiselect.com

REV. C

MI-F5-3-X-( )M

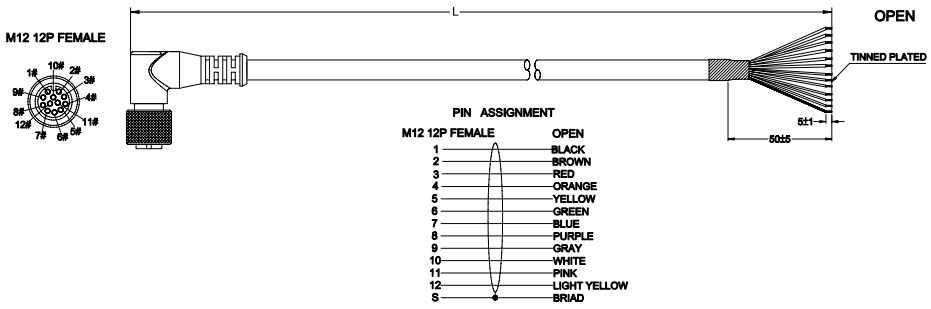

MI-C0-2-D0-( )M

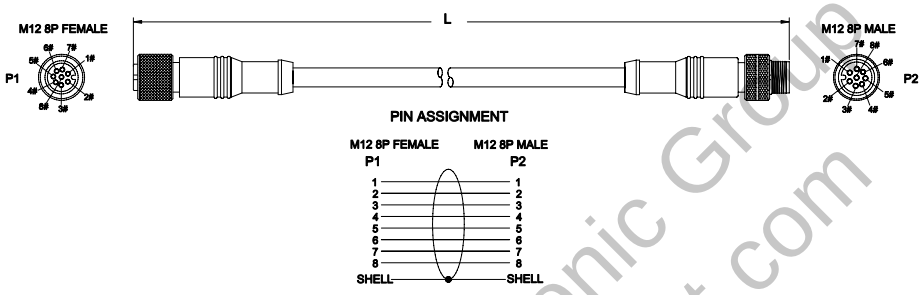

MI-A0-1-B0-( )M

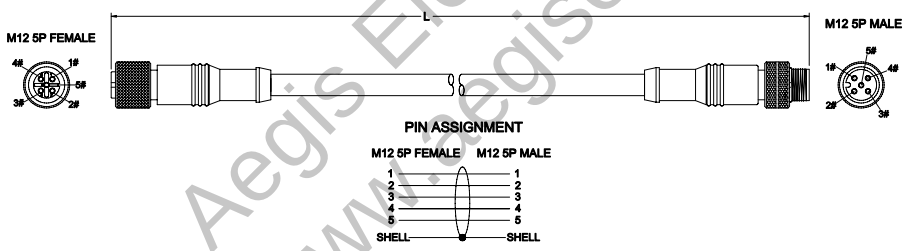

MI-E0-3-F0-( )M

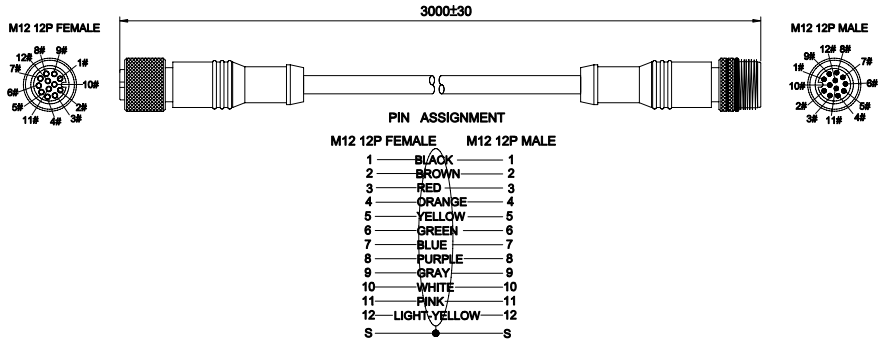

Aegis Electronic Group
www.aegiselect.com

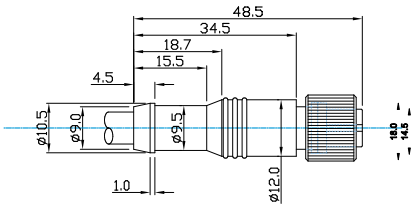

M12 17 Pin
PROFILE

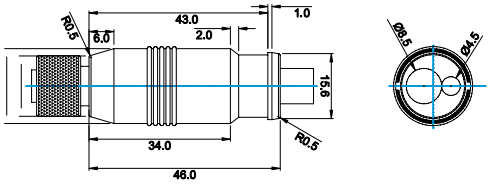

M12 Y Adaptor
PROFILE

162290500-( )M • M12 Female 17-Pin - DB25 Male

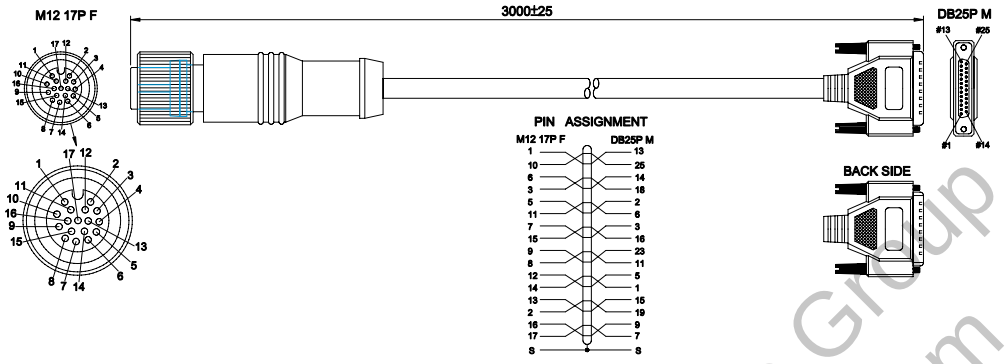

162150500-( )M • M12 Female 12-Pin Custom Y Adaptor - USB & VGA

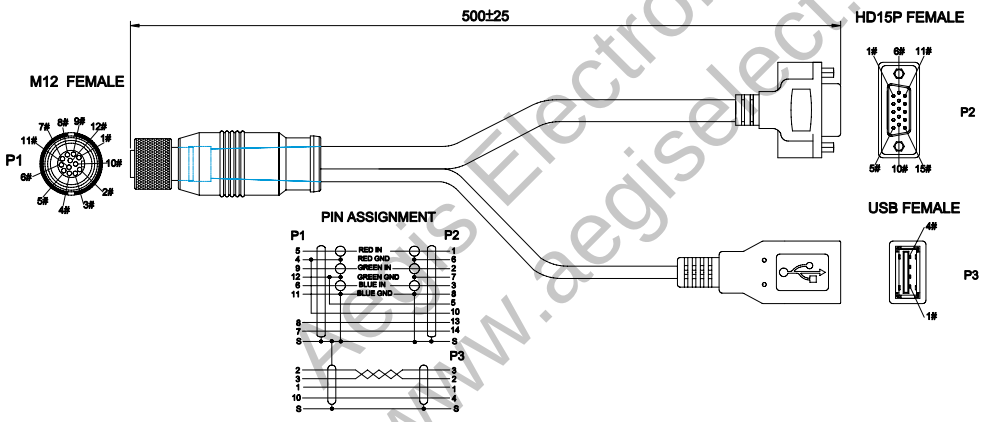

CY-S-0995-( )M • M12 Female 17-Pin to Flying Leads

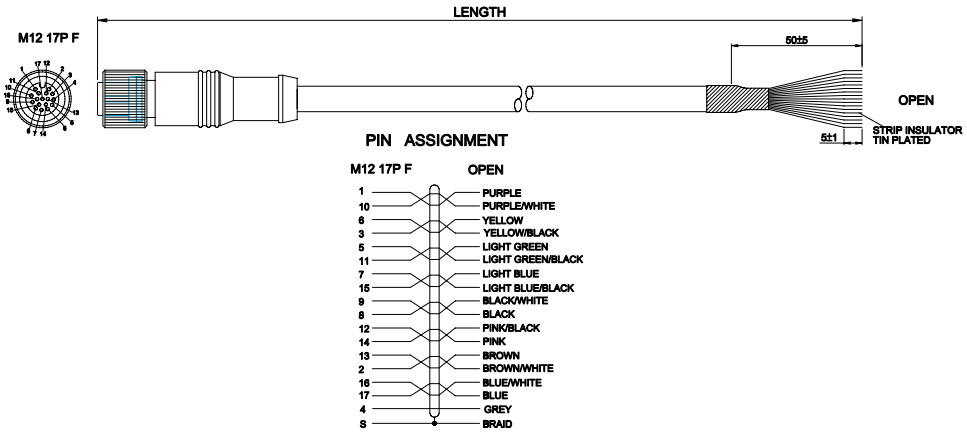

REV. C

Aegis Electronic Group
www.aegiselect.com

uEye
CABLING

CY-S-0399-03M
CY-S-0399-05M

Description:

R/A Micro-D to
USB-A plus Trigger

CY-S-0375-03M
CY-S-0375-05M

Description:

R/A Micro-D
to USB-A

CY-S-0467-03M
CY-S-0467-05M

Description:

Straight Micro-D to
USB-A plus Trigger

CY-S-0466-03M
CY-S-0466-05M

Description:

Straight Micro-D
to USB-A

Aegis Electronic Group
www.aegiselect.com

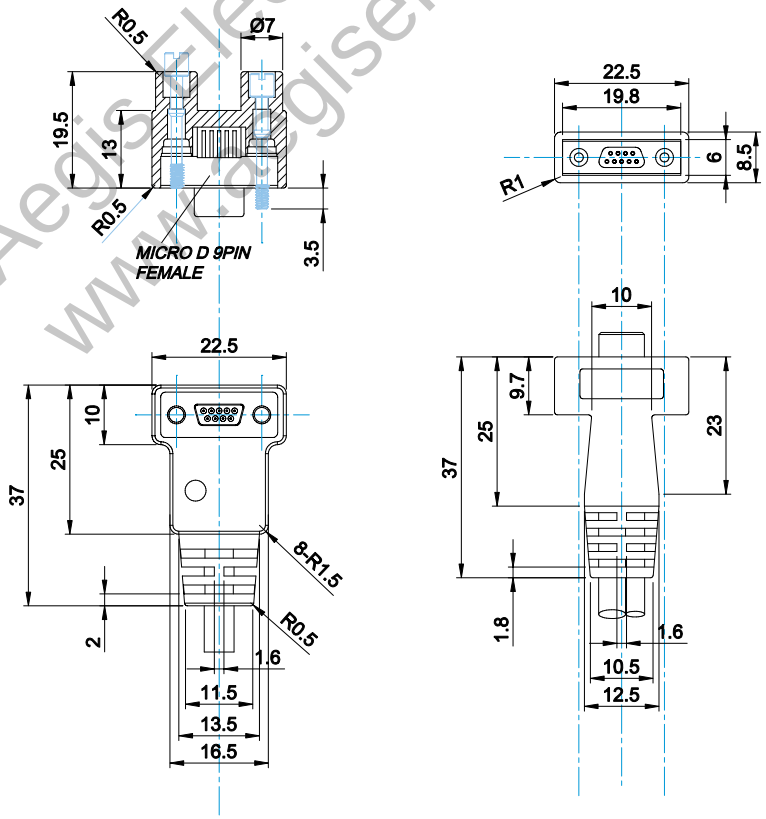

USB 2.0 CABLES

Universal Serial Bus with increased data transfer of 480 Mbps available in various configurations.

PART NUMBER REFERENCE USB 2 ▪ 1 ▪ X ▪ X ▪ ( ) M

USB-A Connector Type: End "1"

Cable Type Options:

HI FLEX = 1
ROBOTIC = 2

Select Connector Type: End "2"

USB-A = 1
USB-B = 2
USB-B w/Screws = 3
Mini USB-B = 4
Mini USB-B w/Screws = 5

Option: Length in Meters

Aegis Electronic Group
www.aegiselect.com

CONNECTOR TYPE OPTIONS:

1

USB-A

2

USB-B

3

USB-B w/Screws

4

Mini USB-B

5

Mini USB-B w/Screws